EXISTING FOOTING SCHEDULE			
TYPE	LENGTH	WIDTH	DEPTH
EF4	4'-0"	4'-0"	1'-0"
EF4.5	4'-6"	4'-6"	1'-0"
EF5	5'-0"	5'-0"	1'-0"
EF5.5	5'-6"	5'-6"	1'-2"
EF6	6'-0"	6'-0"	1'-2"
EF6.5	6'-6"	6'-6"	1'-4"
EF7	7'-0"	7'-0"	1'-6"
EF7.5	7'-6"	7'-6"	1'-6"
EF10.5	10'-6"	10'-6"	2'-0"
EF13	13'-0"	13'-0"	2'-6"
EC1.67	CONT.	1'-8"	1'-0"
EC2.0	CONT.	2'-0"	1'-0"
EC2.5	CONT.	2'-6"	1'-0"
EC3	CONT.	3'-0"	1'-0"

EXISTING FOOTING SCHEDULE 3 / S0.01

MAXIMUM CLEARSPAN	BRICK WALLS (PER 4" OF THICKNESS)	BLOCK WALLS (6", 8", & 12" C.M.U.)
0' TO 5'	∠4x3 1/2x1/4 (LLV)	8" BOND BM. w/(2)-#5 BOTT.
5' TO 6'	∠5x3 1/2x1/4 (LLV)	16" BOND BM. w/(2)-#5 BOTT.
6' TO 8'	∠6x4x5/16 (LLV)	16" BOND BM. w/(2)-#5 BOTT.

SEE MECHANICAL DRAWINGS FOR REQUIRED OPENINGS NOT SHOWN ON ARCHITECTURAL OR STRUCTURAL DRAWINGS. UNLESS NOTED OTHERWISE, BEAR ALL LINTELS A MINIMUM OF 8" OVER SOLID GROUTED C.M.U. 16" DEEP BOND BEAMS ARE MADE UP OF OPEN-BOTTOM BOND BEAM TOP AND STANDARD BOND BEAM BOTTOM.

TYPICAL LINTEL SCHEDULE (U.N.O.) 4 / S0.01
NO SCALE

BEAM DEPTH	MINIMUM LENGTH ANGLES EA. SIDE (INCHES)	BEAM SHEAR EA. END (KIPS)*
8	5 1/2	15
10	5 1/2	15
12	8 1/2	20
14	8 1/2	25
16	8 1/2	40
18	8 1/2	40
21	11 1/2	45

* USE SHEAR VALUES SHOWN TO PROPORTION CONNECTIONS EXCEPT WHERE HIGHER BEAM REACTIONS ARE SHOWN ON FRAMING PLANS AND DETAILS OR CONNECTIONS ARE SPECIFICALLY DETAILED. MINIMUM LENGTH ANGLES APPLY TO DOUBLE ANGLE CONNECTIONS. PLATE SHEAR TABS ARE TO BE DESIGNED FOR BEAM SHEAR VALUES SHOWN EXCEPT WHERE DETAILED OTHERWISE ON THE DRAWINGS. (NO SINGLE ANGLES CONNECTIONS PERMITTED UNLESS SPECIFICALLY NOTED.)

FRAMED BEAM CONNECTION TABLE 5 / S0.01

ABBREVIATION	DESCRIPTION	ABBREVIATION	DESCRIPTION
ALUM.	ALUMINUM	JT.	JOINT
ARCH.	ARCHITECT	LLH	LONG LEG HORIZONTAL
BLDG.	BUILDING	LLV	LONG LEG VERTICAL
BM.	BEAM	LVL	LAMINATED VENEER LUMBER
B.O.B.	BOTTOM OF BEAM	MAX.	MAXIMUM
B.O.D.	BOTTOM OF DECK	MIN.	MINIMUM
B.O.F.	BOTTOM OF FOOTING	MECH.	MECHANICAL
BOTT.	BOTTOM	MFG.	MANUFACTURER
BRG.	BEARING	N.S.	NEAR SIDE
CHK'D.	CHECKED	N.T.S.	NOT TO SCALE
C.J.	CONTROL JOINT	O/C	ON CENTER
CLR.	CLEAR	OPP.	OPPOSITE
C.M.U.	CONCRETE MASONRY UNITS	REG.	REGULAR
COL.	COLUMN	REINF.	REINFORCING
CONC.	CONCRETE	RM.	ROOM
CONN.	CONNECTION	REQ'D.	REQUIRED
CONSTR.	CONSTRUCTION	SHT.	SHEET
CONT.	CONTINUOUS	SQ.	SQUARE
DWGS.	DRAWINGS	S.S.	STAINLESS STEEL
EA.	EACH	STIFF.	STIFFENER
E.F.	EACH FACE	STD.	STANDARD
EL.	ELEVATION	THICK.	THICKENED
ELEV.	ELEVATION	THR'D.	THREADED
E.S.	EACH SIDE	T & B	TOP AND BOTTOM
E.W.	EACH WAY	T & G	TONGUE & GROOVE
EXIST.	EXISTING	T.O.B.	TOP OF BEAM
EXP.	EXPANSION	T.O.F.	TOP OF FOOTING
FDN.	FOUNDATION	T.O.P.	TOP OF PIER
F.S.	FAR SIDE	T.O.S.	TOP OF SLAB
GALV.	GALVANIZED	T.O.W.	TOP OF WALL
G.C.	GENERAL CONTRACTOR	TYP.	TYPICAL
G.T.	GIRDER TRUSS	U.N.O.	UNLESS NOTED OTHERWISE
GEN.	GENERAL	WT.	WEIGHT
HORIZ.	HORIZONTAL	W.W.F.	WELDED WIRE FABRIC
H.C.	HOLLOW CORE	W.P.	WORK POINT
HORZ.	HORIZONTAL		

SCHEDULE OF ABBREVIATIONS 2 / S0.01

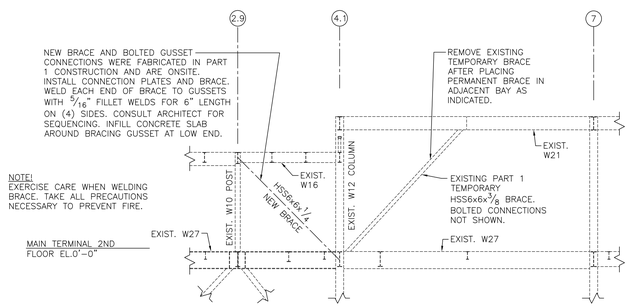

REMOVAL OF PART 1 TEMPORARY BRACE AND INSTALLATION OF PERMANENT BRACE ALONG COL. LINE 1.7A 6 / S0.01
1/8" = 1'-0"

General Notes

1. Design Loads
   Risk Category III
   Importance Factors:
   Snow (Is)=1.10
   Ice (Thickness) (Ii) =1.25
   Ice (w/ Wind) (Iw)=1.00
   Seismic (Ie) =1.25

   Live Loads:
   New Construction Roof..... 20psf
   New Construction 2nd Floor..... 100psf

   Ground Snow Load, (Pg): 10 psf

   Wind Load:
   Basic Wind Speed (3-second gust) 132 mph (ASCE 7-10/ 2018 NC Building Code)
   Exposure Category C

   Component & Cladding:
   All cladding and building components will be designed and anchored to resist 132 m.p.h component and cladding wind forces determined according to the NC State Building Code for the Exposure Category indicated above. Provide all bracing and connections necessary to transfer lateral loads to structure.

   Seismic Load:
   Seismic Design Category C
   Mapped Spectral Response Accelerations, Ss = 23.0%g S1 = 9.0%g
   Spectral Response Acceleration, Sms = 36.8%g Sm1 = 23.7%g
   Spectral Response Coefficients, SDs = 24.5%g SD1 = 15.8%g
   Site Classification = D

   Basic Structural System (check one)
   ___ Bearing wall
   ___ Building Frame
   X Moment Frame
   ___ Dual w/Intermediate R/C or Special Steel
   ___ Dual w/Special Moment Frame
   ___ Inverted Pendulum

   Response Modification Factor, R = 3.5
   Seismic Response Coefficient, Cs = 0.09

   Analysis procedure:
   X Simplified
   ___ Equivalent Lateral Force
   ___ Modal

* Special Inspections are required for this project in accordance with the North Carolina State Building Code Section 1704. See Statement of Special Inspections on Sheet S0.02 for required structural inspections.

2. Materials
   A. Concrete f'c = 4000 psi Reg. wt. U.N.O.
      f'c = 4500 psi Reg. wt. walls and piers
      f'c = 4000 psi Lt. wt. (120 pcf fresh density ± 5 pcf max) at elevated slabs on metal deck
      All concrete to have max water/cement ratio of 0.45.
   B. Reinforcing Steel ASTM A-615 Grade 60
   C. Welded Wire Fabric ASTM A-1064
   D. Structural Steel ASTM A-36 U.N.O.
      ASTM A-992/A-572-50 at all beams and columns
   E. HSS Rect. Fy= 50 ksi under ASTM A-500, Grade C
   F. HSS Round Fy= 46 ksi under ASTM A-500, Grade C
   G. Structural Pipe ASTM A-53, Type E or S, Grade B
   H. Bolts ASTM A-325N
   I. Weld Electrodes E70
   J. Steel Deck ASTM A-653 (33,000 psi min)
   K. Steel Joists K-Series
   L. Masonry ASTM C90-00, f'm = 1500 psi min
   M. Anchor Rods ASTM F1554 w/ ASTM A-563 heavy hex nuts (Gr.36/Gr.55 per drawings)
   N. Expansion Bolts Hilti Kwik Bolt III (or equal)
   O. Epoxy Anchoring System Hilti HY70 (or equal) for anchorage to masonry
      Hilti HIT-RE 500 V3 (or equal) for anchorage to concrete

3. Foundations
   A. Allowable soil bearing is 2000 psf. Site will be proofrolled, densified and/or undercut, tested, and repaired according to subsurface exploration report by Geotechnologies, Inc. dated October 30, 2015 (including 11/09/15 addendum letter) [Geotechnologies Inc. Project #1-15-0630-EA].
   B. A horizontal shear key with reinforcing continuous through the joint will be used at all cold joints in continuous footings/grade beams.
   C. A horizontal shear key with reinforcing continuous through the joint will be used at all cold joints in the slab on grade.
   D. Compact bottom of all footing excavations with a vibratory hand operated compactor before placing reinforcing in footing excavations.
   E. Compact stone layer under floor slabs with a vibratory hand operated compactor before pouring slab.
   F. Provide a vapor barrier beneath the floor slab (see architectural drawings and specifications).
   G. The general contractor will coordinate and lower wall and column footings where required to be below any new or existing utility lines. Notify Arch./Engineer of any footing adjustment required before beginning work. In no condition will utilities be allowed under column footings.
   H. Use 2'-7" lap splices for all continuous footing reinforcing unless shown otherwise. Do not splice mat footing reinforcing.
   I. Provide continuous footing reinforcing corner bars at all footing corners and intersections. Corner bar sizes are to match footing bar sizes.
   J. Sides of all concrete piers and walls are to be formed.
   K. No heavy equipment will be used within 8 feet of all retaining walls U.N.O.
   L. No backfill is to be placed against retaining walls until concrete has cured and reached design strength.
   M. All concrete work will comply with ACI 301 "Specifications for Structural Concrete" and ACI 318-14 "Building Code Requirements for Structural Concrete" unless otherwise noted on the drawings and specifications.

4. Superstructure
   A. Structural steel fabricator and erector are to be AISC certified. Submit certifications.
   B. All welders, shop and field, will be certified for the type of work involved. Submit certifications.
   C. The steel fabricator will submit a letter sealed by an engineer registered in North Carolina stating that all connections have been designed and detailed on the shop drawings for the shear values, tensile loads and capacities shown on the structural drawings.
   D. All shop drawings will be checked by the fabricator before being submitted to the Architect/Engineer for review. Submit a hard copy for the Structural Engineer's review if shop drawings are transmitted electronically. Otherwise submit only two copies to the Structural Engineer for review (one reproducible and one copy for the Structural Engineer's records).
   E. Connections will be designed by the fabricator's NC registered engineer unless specifically detailed on the structural drawings. All connections are to be designed as simple connections except where indicated otherwise on plans or in sections. Design connections per AISC Manual of Steel Construction (ASD) for shears indicated in the framed beam connection tables unless shears are indicated on framing plans or details. In addition, design connections for axial load indicated in details. Do not use slotted holes for axially loaded beam connections without written approval from the Structural Engineer before preparing shop drawings.
   F. Connections: Shop - Bolted or Welded
      Field - Bolted U.N.O.
   G. Bolts will be 3/4" diameter, A-325N, unless otherwise noted. All bolts will be tightened by a few impacts of an impact wrench or the full effort of a man using an ordinary spud wrench with a minimum of 200 foot pounds of torque and a maximum of 250 foot pounds of torque for a snug tight condition.
   H. U.N.O. bolt threads can be either cut or rolled. If threads are rolled, do not reduce bolt diameter. Make adjustments on shop drawings for increased shank diameter at thread location.
   I. All structural bolts will have heavy hex nuts.
   J. Unless shown otherwise all field welds will be 3/16 inch fillet welds.
   K. See specifications and structural/architectural drawings for Architecturally Exposed Structural Steel requirements and locations. All shop and field welds at architecturally exposed areas will be grinded smooth for an architecturally exposed finish.
   L. All splices at perimeter roof edge angles or plates will be butt welded all around to provide roof diaphragm.
   M. Provide screed angles around all floor openings and at slab edges.
   N. General Contractor to verify/determine all existing dimensions, elevations, and conditions before fabricating steel. Notify Architect and Engineer of any significant discrepancies.
   O. All detailing, fabricating, and erection shall conform to the following specifications (latest editions), except as otherwise indicated:
      AISC 360 - "Specification for Structural Steel Buildings."
      AISC 303 - "Code of Standard Practice for Steel Buildings and Bridges."
      1. Paragraph 4.4.1 of the above code is hereby modified by deletion of the following sentences:
         a) "Confirmation that the Fabricator has correctly interpreted the Contract Documents in the preparation of those submittals";
         b) "Confirmation that the Owner's Designated Representative for Design has reviewed and approved the Connection details shown on the Shop and Erection Drawings and submitted in accordance with Section 3.1.2, if applicable";
      AWS D1.1 - "Structural Welding Code - Steel."
      SDI - "Code of Standard Practice." Steel Deck Institute.
   P. Shop Painting - One coat of fabricator's standard typical U.N.O. Coordinate with Architecturally Exposed Steel Requirements. Omit paint on all structural steel to be sprayed with fireproofing or encased in concrete and at field-applied shear studs. Hot-dip galvanize steel according to ASTM A-123 where galvanizing is required. Touch up welds and damaged areas with a field applied galvanizing according to ASTM A-780.
   Q. See the architectural drawings and specifications for required galvanizing of steel lintel angles, plates, and beams U.N.O.
   R. Contractor shall have sole responsibility for site safety. Fabricator and Erector shall review Contract Documents and if the structure, as shown on those documents, is in conflict with the requirements of any erection safety regulations, Fabricator shall notify Structural Engineer prior to commencing erection shop drawing production. If Fabricator and/or Erector fail to notify Structural Engineer, as stated above, they shall become responsible for all costs for correcting such conflicts with the requirements of any and all safety regulations.
   S. The general contractor will be responsible for properly guying and bracing the structure to resist live, dead, wind, and construction loads during construction. An unstable condition exists until all the building components are in place. Columns and walls are not designed as free-standing and must be adequately braced.
   T. The contractor will coordinate and verify size, location, type, and direction of all pads, depressions, bolts, sleeves, anchors, openings, etc. to be set or cast in concrete or masonry prior to placement. All penetrations of walls and floors shall be approved by the architect and structural engineer if not indicated on the structural drawings. All penetrations shall be sleeved with structural steel sleeves. Sleeves shall be supplied by the trade requiring the penetration.
   U. General Contractor is responsible for coordinating locations of braces, bridging, and miscellaneous framing to avoid conflict with ducts, plumbing, or any other utility.

5. Steel Deck
   A. All deck welders are to be certified for the type of work involved. Submit certifications.
   B. All deck will meet the requirements of the Steel Deck Institute and will be continuous over three or more spans unless noted otherwise.
   C. Roof deck will be 1.5", 20 gage, G60 galvanized wide rib (Type B) steel deck (New Millennium or equal) unless noted otherwise. At Front Canopy, provide 2", 18 gage painted/G60 galvanized architectural steel deck (Versa-Dek 2 LS by New Millennium or equal). At Main Terminal existing roof opening infill locations, provide 3", 20 gage, Type N steel deck (single span). Typical infill detail may be used at miscellaneous mechanical roof openings. Provide 3" deck - coordinate with mechanical dwgs. See architectural drawings and specifications for any additional requirements of architectural decking. Roof deck will be welded to supporting beams and angles with 5/8" diameter puddle welds as follows:
      -intermediate supports - 6" o/c at 1.5" deck (36/7 Pattern)
      24.5/4 Pattern at 2" architectural deck
      8"o/c at 3" deck.
      -individual deck ends (including deck ends at building perimeter and deck end laps) - 6" o/c at 1.5" deck and 6" ± o/c at 2" architectural deck and 8" o/c at 3" deck..
      -deck sides at building perimeter - 12" o/c. Provide continuous 20 gage filler sheet if 1.5" deck is cut. Detail architectural decking shop drawings to avoid field cutting.
      - See sections for additional welding requirements.
   D. Provide (1)-#10 tek side lap screws per span for 1.5" roof deck and (1)-#10 tek at 3'-0" o/c max for 3" roof deck. At 2" architectural decking, connect sidelaps with 1.5" seam welds at 36" o/c maximum.
   E. Composite steel floor deck will be 2", 20 gage, with G60 Galv. (type 2.0CD by New Millennium or equal) with 5/8" diameter puddle welds 12" o/c at ea. supporting member. Side laps and deck sides at perimeter will be fastened at midspan or 3'-0 o/c maximum between supports, whichever distance is smaller. No button punching allowed. Provide girder filler plates as needed.
   F. Form deck will be 9/16", 26 gage galvanized floor form. Fasten deck to supporting members with minimum of two 5/8" puddle welds thru weld washers.
   G. Provide continuous cover plates at all changes in roof deck direction.
   H. Provide deck support angles around columns and any other required locations.
   I. Provide an angle frame to support roof deck around all roof deck penetrations greater than 6" wide including sump pans at roof drains. See typical detail.
   J. Do not support suspended ceiling, light fixtures, ducts, metal studs, or other items from steel floor or roof deck U.N.O. A 50lb. max load per 4 ft x 4 ft square area is acceptable hanging from the composite floor slab. Anchors attached to the metal floor deck are not acceptable. The hangers supporting the load from the floor slab should extend well into the concrete and should be installed before the concrete is poured to ensure that the load is supported by the concrete and not by the metal deck. Slots cut into the floor deck for the placement of hangers should be as small as possible and should be cut parallel to the flutes. Slots in the deck shall not be cut perpendicular to the flutes. Contractor may consult architectural roof deck manufacturer for permissible loads to be hung from deck utilizing manufacturer's hangers designed for architectural decking. Submit letter from decking manufacturer's design engineer addressing hung loads for approval.
   K. Provide 4" minimum end lap for roof decks. Butt ends of 2" composite floor deck over supports.

6. Masonry
   A. All masonry work shall conform to ACI 530-10 "Building Code Requirements for Masonry Structures" unless otherwise noted on the drawings and specifications.
   B. Reinforce masonry as shown on the drawings. In addition, provide a bar at all window and door jambs, each side of control joints, and at wall ends and corners. Provide a bar per cell for two cells beneath each end of all masonry or steel lintels or beams bearing on masonry and spanning greater than 4'-0, unless additional bars are shown on plans. Additional bars will be same size as wall bars. All wall bars will be doweled to footing and/or slabs and bond beams at top of wall (U.N.O.).
   C. Support and fasten vertical reinforcing together to prevent displacement by construction loads or by placement of grout.
   D. The top of all interior non-loadbearing masonry partitions will be braced at 8 feet maximum centers by intersecting walls or angle bracing to beams or walls. Allow for 1" floor or roof deflection unless otherwise noted.
   E. Use type S mortar.
   F. Grout will be 3000 psi peagravel grout with high slump (9" + or -). Build walls in 4'-8" high increments and grout cells before building the next 4'-8" high increment. Consolidate grout at the time of placement with a mechanical vibrator and re-consolidate after initial water loss and settlement has occurred.
   G. Grout all block cells with reinforcing bars solid. Grout all block cells solid below finish floor.
   H. Grout will be tight to bottom of all bearing plates on masonry walls. No voids permitted.
   I. See architectural drawings for locations of vertical wall control joints. Do not locate wall C.J.s within 16" of door, window, or any other masonry jamb (U.N.O.).
   J. Continue bond beam reinforcing bars through wall control joints.
   K. All intersecting walls will be connected with horizontal prefabricated corner and tee joint reinforcing.
   L. Bond beam lintels will be located over all openings in C.M.U. walls including mechanical duct openings (see lintel schedule). Frame all required wall openings, including mechanical duct openings, in C.M.U. walls during wall construction. Provide a minimum of 8" solid grouted masonry between individual ducts at openings with multiple ducts unless indicated otherwise on the structural drawings.
   M. Bear all masonry lintels 1'-4" minimum each end on solid grouted C.M.U. (U.N.O.).
   N. Grout all C.M.U. walls tight to columns (U.N.O.).
   O. Provide 2'-6 minimum lap splices for all bars in continuous bond beams. Stagger splices. Do not splice bars in lintel beams.
   P. Coordinate all wall locations with Architectural Drawings.
   Q. Provide the following minimum contact lap splices for vertical wall bars U.N.O.:
      #4 bar: 25" (6", 8", 10" & 12" c.m.u.)
      #5 bar: 39" (6" c.m.u.)
      31" (8", 10" &12" c.m.u.)
      #6 bar: 57" (8" c.m.u.)
      52" (10" & 12" c.m.u.)
      #7 bar: 74" (8" c.m.u.)
      61" (10" & 12" c.m.u.)

7. Escalator
   A. See the architectural drawings and specifications for all escalator requirements. Verify pit depth and size before beginning construction. Notify engineer of discrepancies.
   B. Verify escalator bearing detail requirements with supporting structure provided before beginning construction. Notify engineer of discrepancies.

8. Elevator
   A. See the architectural drawings and specifications for all elevator requirements.
   B. Elevator Manufacturer is to design and provide guide rail, guide rail bracket, and all other framing and bracing required for the elevator.
   C. Provide door sill angle as required by the elevator manufacturer.
   D. Reinforce and grout c.m.u. elevator walls as indicated on the structural drawings. Consult elevator manufacturer drawings for additional grouting/reinforcing required.

9. Miscellaneous
   A. The structural drawings take precedence when a conflict occurs between the structural drawings, the architectural drawings, the mechanical drawings, and the specifications concerning a structural item. Notify Architect and Engineer in writing for clarification prior to bidding. The term unless noted otherwise (U.N.O.), means unless noted otherwise on the **structural drawings.** If there is a conflict on the structural drawings or specifications, the most stringent requirement will control.
   B. Verify all existing building dimensions, elevations, and details with the field conditions. Notify the architect and engineer of any significant discrepancies.
   C. All Hilti epoxy anchors will be installed by a Hilti Certified contractor. If equivalent product is submitted, installer must have manufacturer's certification to install the product that is submitted.
   D. See architectural drawings for all required floor depressions, floor toppings, and floor slopes not shown.
   E. All concrete work will comply with ACI 301 "Specifications for Structural Concrete" and ACI 318-14 "Building Code Requirements for Structural Concrete" unless otherwise noted on the drawings and specifications.
   F. Use type "B" laps for all reinforcing lap splices U.N.O.
   G. At all reinforced walls and slabs where there is an opening, provide one half of the interrupted reinforcing on each side of the opening and continue bars to next support U.N.O. on drawings.
   H. Provide corner bars for all continuous horizontal reinforcing.
   I. Provide diamond blockouts with keys to floor slab if slab-on-grade is poured before steel columns are erected. Align points of diamond with slab control joints.
   J. Prior to slab on grade pour, coordinate sawed joint locations with Engineer and Architect. Unless shown otherwise locate sawed slab-on-grade control joints 12 feet o/c in each direction for 4" thick slab. Existing conditions and extent of demolition and infill may require additional C.J.'s to reduce slab cracking. Locate control joints under all terrazzo control joints and divider strips. Coordinate locations with Architect and Terrazzo Contractor.
   K. No loads (including masonry) will be placed on elevated floor slabs until concrete reaches 75% design strength.
   L. General Contractor to notify our office during major phases of construction so observations can be made by our office as required.
   M. All shop drawings will be checked by the fabricator before being submitted to the Architect/Engineer for review. Submit a hard copy for the Structural Engineer's review if shop drawings are transmitted electronically. Otherwise submit only two copies to the Structural Engineer for review (one reproducible and one copy for the Structural Engineer's records).

10. Utilities and Architectural Components
   A. The general contractor will coordinate and lower new wall and column footings where required to be below any new or existing utility lines. Notify Arch./Engineer of any footing adjustment required before beginning work. In no condition will utilities be allowed under new or existing column footings.
   B. Do not undermine new or existing footings when placing utilities. Provide soil shoring as needed to prevent undermining new or existing footings.
   C. No electrical conduit runs will be located in composite floor slabs unless approved in writing by Architect and Structural Engineer.
   D. Do not core thru or otherwise damage existing building concrete beams, concrete joists, concrete columns or footings when placing new utilities. Do not core or cut thru tapered edges of concrete joists.
   E. Do not suspend bulkheads, utilities, etc. from the underside of concrete beams and concrete joists. Attachment should be made to the side of the concrete structural member (coordinate anchorage location with concrete reinforcing locations - Do Not Damage Reinforcing).
   F. Do not support suspended ceiling, light fixtures, ducts, metal studs, or other items from steel floor or roof deck . A 50lb. max load per 4 ft x 4 ft square area is acceptable hanging from the composite floor slab. Anchors attached to the composite metal floor deck are not acceptable. The hangers supporting the load from the floor slab should extend well into the concrete and should be installed before the concrete is poured to ensure that the load is supported by the concrete and not by the metal deck. Slots cut into the floor deck for the placement of hangers should be as small as possible and should be cut parallel to the flutes. Slots in the deck shall not be cut perpendicular to the flutes. Contractor may consult architectural roof deck manufacturer for permissible loads to be hung from deck utilizing manufacturer's hangers designed for architectural decking. Submit letter from decking manufacturer's design engineer addressing hung loads for approval.
   G. All cladding and building components will be designed and anchored to resist 132 m.p.h wind forces determined according to the NC State Building Code for the Exposure Category indicated in these General Notes. Provide all bracing and connections necessary to transfer lateral loads to structure.

11. Exterior Metal Panel Curtainwall System
   A. See architectural drawings for exterior metal panel curtainwall and parapet locations. Provide a complete curtainwall system, including supporting substructure, designed by an engineer registered in the state of North Carolina for all component and cladding wind loading and deflection criteria required per 2018 NC Building Code/ASCE 7-10. Design substructure as needed for the attachment of window, door and shade components. Provide all bracing and connections necessary to transfer gravity and lateral loads to building structure. Submit sealed erection drawings and calculations to Architect.
   B. See architectural drawings/specifications for additional requirements.

GENERAL NOTES 1 / S0.01

GORDON JOHNSON Architecture
654 Hay Street, Suite 4
Fayetteville, NC 28301
Phone: (910) 223-2186
E-Mail: gordon@gordonjohnsonarchitecture.com

FLEMING & ASSOCIATES, PA
1004 HAY STREET
FAYETTEVILLE, NC 28305
PH 910-323-3005
FAX 910-433-2604
www.flemingandassociates.com

NORTH CAROLINA PROFESSIONAL ENGINEER SEAL 11278 STEPHEN FLEMING 7/22/19

Fayetteville Regional Airport - Airline Terminal Improvements Part 2

GENERAL NOTES, SCHEDULES, & BRACING ELEVATION

400 Airport Road
Fayetteville, North Carolina 28306

DRAWN BY: S.JD
REVIEWED BY: SF
DATE: 7-22-19
PROJECT NO.: 1515

REVISIONS
1 8-14-19 ADDENDUM #3
2
3

SHEET NUMBER
S0.01

#19-59

SCHEDULE OF STRUCTURAL SPECIAL INSPECTION SERVICES

Risk Category III
Seismic Design Category C

The following are the structural special inspection material categories for this project. See the tables on this sheet for the special inspections recommended to be performed under each category. The special inspector should be familiar with the requirements of the NC Building Code Chapter 17 and the items in each category that require special inspections. See specifications for required testing and inspection tasks not included on this sheet:

- ☒ Soils
- ☒ Underpinning / Soil Shoring
- ☒ Retaining Walls
- ☒ Concrete Construction
- ☒ Steel Construction
- ☒ Masonry Construction

The Owner or the Owner's Agent is to hire a special inspection agent to oversee, record and document all indicated special inspections. The inspection and testing agents shall be engaged by the Owner or the Owner's Agent and not by the Contractor or Subcontractor whose work is to be inspected or tested. Any conflict of interest must be disclosed to the Building Official prior to commencing work. The inspection and testing agents are to be certified for the type of work involved. Test and inspections indicated will be based upon the requirements of the applicable building codes and the contract documents (full procedures for required testing and inspections are not included in these tables).

REQUIRED VERIFICATION AND INSPECTION OF SOILS

VERIFICATION AND INSPECTION TASK	FREQUENCY OF INSPECTION: CONTINUOUS DURING TASK LISTED	FREQUENCY OF INSPECTION: PERIODIC DURING TASK LISTED
1. Verify materials below footings are adequate to achieve the design bearing capacity.	--	X
2. Verify excavations are extended to proper depth and have reached proper material.	--	X
3. Perform classification and testing of controlled fill materials.	--	X
4. Verify use of proper materials, densities and lift thicknesses during placement and compaction of controlled fill.	X	--
5. Prior to placement of controlled fill, observe subgrade and verify that site has been prepared properly.	--	X

REQUIRED VERIFICATION AND INSPECTION OF UNDERPINNING / SOIL SHORING

VERIFICATION AND INSPECTION TASK	FREQUENCY OF INSPECTION: CONTINUOUS DURING TASK LISTED	FREQUENCY OF INSPECTION: PERIODIC DURING TASK LISTED
1. Verify qualifications of underpinning / soil shoring contractor.	--	X
2. Verify compliance of installation with sealed underpinning / soil shoring design drawings.	--	X

Retaining Walls (walls with a cumulative vertical relief greater than 5'-0")

VERIFICATION AND INSPECTION TASK	FREQUENCY OF INSPECTION: CONTINUOUS DURING TASK LISTED	FREQUENCY OF INSPECTION: PERIODIC DURING TASK LISTED
1. Verify retaining wall layout and construction type are per the drawings.	--	X
2. Verify materials below footings are adequate to achieve the design bearing capacity. Refer to "Required Verification and Inspection of Soils."	<>	<>
3. Refer to "Required Verification and Inspection of Concrete Construction" for footing and concrete wall construction.	<>	<>
4. Verify actual soil conditions are similar to those anticipated in design.	--	X
5. Examine backfill materials and drainage systems for compliance with plans and specifications.	--	X
<> See referenced sections for frequency of inspections.		

REQUIRED VERIFICATION AND INSPECTION OF CONCRETE CONSTRUCTION

VERIFICATION AND INSPECTION	FREQUENCY OF INSPECTION: CONTINUOUS DURING TASK LISTED	FREQUENCY OF INSPECTION: PERIODIC DURING TASK LISTED	REFERENCED STANDARD
1. Inspection of reinforcing steel and placement	--	X	ACI 318: 20.25.2,25.3, 26.6.1-26.6.3
2. Inspection of anchor bolts and embeds to be installed in concrete prior to placement of concrete. Inspection shall include material verification, bolt diameter, embedment length, bolt gage, and special details.	X	--	ACI 318: 17.8.2
3. Verifying use of required design mix.	--	X	ACI 318: Ch.19, 26.4.3-26.4.4
4. At the time fresh concrete is sampled to fabricate specimens for strength tests, perform slump and air content tests, and determine the temperature of the concrete. Perform unit weight test for lightweight concrete. Verify that slump, air content, temperature, and unit weight meet construction specification requirements. Fabricate and test specimens for compressive strength according to specifications. Verify 28 day concrete strength test results meet Contract Documents.	X	--	ASTM C 172 ASTM C 31 ACI 318: 26.4,26.12
5. Inspection of concrete placement for proper application techniques (conveying and depositing).	X	--	ACI 318: 26.5
6. Inspection for maintenance of specified curing temperature and techniques.	--	X	ACI 318: 26.5.3-26.5.5
9. Verification of in-situ concrete strength prior to removal of shores and forms from beams and structural slabs.	--	X	ACI 318: 26.11.2
10. Inspect formwork for shape, location and dimensions of the concrete member being formed.	--	X	ACI 318: 26.11.1.2(b)
11. Inspection of anchors installed in hardened concrete. Verify approved epoxy adhesive anchors are installed by contractors certified for the type of adhesive anchor used.	--	X	ACI 318: 17.8.2.4,17.8.2

LEVEL 1 REQUIRED VERIFICATION AND INSPECTION OF MASONRY CONSTRUCTION

VERIFICATION AND INSPECTION TASK	FREQUENCY OF INSPECTION: CONTINUOUS DURING TASK LISTED	FREQUENCY OF INSPECTION: PERIODIC DURING TASK LISTED	TMS 402/ ACI 530/ ASCE 5	TMS 602/ ACI 530.1/ ASCE 6
1. Compliance with required inspection provisions of the construction documents and the approved submittals shall be verified.	--	X		Art. 1.5
2. Verification of f'm prior to construction except where specifically exempted by the NC Building Code.	--	X		Art. 1.4B
3. Verification of slump flow.	X	--		Art. 1.5B.1.b.3
4. As masonry begins, the following shall be verified to ensure compliance:				
a. Proportions of site-prepared mortar.	--	X		Art. 2.6A
b. Construction of mortar joints.	--	X		Art. 3.3B
c. Location of reinforcement and connectors.	--	X		Art. 3.4, 3.6A
5. During construction the special inspection program shall verify:				
a. Size and location of structural elements.	--	X		Art. 3.3F
b. Type, size and location of anchors, including other details of anchorage of masonry to structural members, frames or other construction.	--	X	Sec. 1.2.2(e), 1.16.1	
c. Specified size, grade and type of reinforcement and anchor bolts.	--	X	Sec. 1.15	Art. 2.4, 3.4
d. Preparation, construction and protection of masonry during cold weather (temperature below 40°F) or hot weather (temperature above 90°F).	--	X		Art. 1.8C, 1.8D (See also NC Bldg Code 2104.3, 2104.4)
3. Prior to grouting, the following shall be verified to ensure compliance:				
a. Grout space is clean.	--	X		Art. 3.2D
b. Placement of reinforcement and connectors.	--	X	Sec. 1.13	Art. 3.4
c. Proportions of site-prepared grout.	--	X		Art. 2.6B
d. Construction of mortar joints.	--	X		Art. 3.3B
4. Grout placement shall be verified to ensure compliance.	X	--		Art. 3.5
5. Preparation of any required grout specimens, mortar specimens and/or prisms shall be observed.	--	X		Art. 1.4

REQUIRED VERIFICATION AND INSPECTION OF STEEL CONSTRUCTION

VERIFICATION AND INSPECTION	FREQUENCY OF INSPECTION: CONTINUOUS DURING TASK LISTED	FREQUENCY OF INSPECTION: PERIODIC DURING TASK LISTED	REFERENCED STANDARD	IBC REFERENCE
1. Material verification of high-strength bolts, nuts and washers:				
a. Identification markings conform to ASTM standards specified in the approved construction documents.	--	X	AISC 360, Section A3.3 and applicable ASTM material standards	
b. Manufacturer's certificate of compliance required.	--	X	--	
2. Inspection of high-strength bolting:				
a. Snug-tight joints.	--	X	AISC 360, Section M2.5	1704.3.3
b. Pre-tensioned and slip-critical joints using turn-of-nut with matchmarking, twist-off bolt or direct tension indicator methods of installation.	--	X		
c. Pre-tensioned and slip-critical joints using turn-of-nut without matchmarking or using calibrated wrench methods of installation.	X	--		
3. Material verification of structural steel and cold-formed steel deck:				
a. For structural steel, identification markings to conform to AISC 360.	--	X	AISC 360, Section M5.5	
b. For other steel, identification markings to conform to ASTM standards specified in the approved construction documents.	--	X	Applicable ASTM material standards	
c. Manufacturer's certified test reports.	--	X		
4. Material verification of weld filler materials:				
a. Identification markings to conform to AWS specification in the approved construction documents.	--	X	AISC 360, Section A3.5 and applicable AWS A5 documents	
b. Manufacturer's certificate of compliance required.	--	X		
5. Inspection of welding:				
a. Structural steel, steel bar joists and cold-formed steel deck:				
Inspection by Certified Welding Inspector (CWI) — 1) Complete and partial joint penetration groove welds. a. Visual Inspection and b. Ultrasonic Inspection	X	--	AWS D1.1	1704.3.1
2) Multipass fillet welds.	X	--		
3) Single pass fillet welds > 5/16".	X	--		
4) Plug and slot welds.	X	--		
5) Single pass fillet welds ≤ 5/16".	--	X		
6) Shear stud welds a. Visual Inspection and b. Perform bend tests if visual inspections reveal either a less-than-continuous 360-degree flash or welding repairs to any shear connector. c. Conduct bend tests on additional shear connectors if weld fracture occurs on shear connectors already tested, according to requirements in AWS D1.1.	--	X		
7) Floor and roof deck welds.	--	X	AWS D1.3	
6. Inspection of steel frame joint details for compliance with approved construction documents:				
a. Details such as bracing and stiffening.	--	X		1704.3.2
b. Member locations.	--	X		
c. Application of joint details at each connection.	--	X		

7. Obtain the following certifications:

For Structural Steel:
1) Fabricator's AISC Certification (Category STD).
2) Erector's AISC Certification (Category CSE).
3) Welder's certificates (overhead and vertical welds).
4) Certification of compliance for shear studs.
5) Manufacturer's certificate of compliance for high-strength bolts, nuts and washers.
6) Weld filler material certificates of compliance.

For Joists:
1) Manufacturer's Steel Joist Institute (SJI) certification.

For Deck:
1) Manufacturer's Steel Deck Institute (SDI) certification.

For Cold-Formed Steel Loadbearing Studs:
1) Manufacturer's Code Compliance Certification.

GORDON JOHNSON
Architecture
654 Hay Street, Suite 4
Fayetteville, NC 28301
Phone: (910) 223-2186
E-Mail: gordon@gordonjohnsonarchitecture.com

FLEMING & ASSOCIATES, PA
1004 HAY STREET
FAYETTEVILLE, NC 28305
TELEPHONE 910-323-7500
FAX 910-433-2604
www.flemingandassociates.com

NORTH CAROLINA PROFESSIONAL SEAL 11278 ENGINEER STEPHEN E. FLEMING

Fayetteville Regional Airport - Airline Terminal Improvements Part 2

SCHEDULE OF SPECIAL STRUCTURAL INSPECTIONS

400 Airport Road
Fayetteville, North Carolina 28306

DRAWN BY: SJD
REVIEWED BY: SF
DATE: 7-22-19
PROJECT NO.: 1515

REVISIONS

SHEET NUMBER
S0.02

#19-59

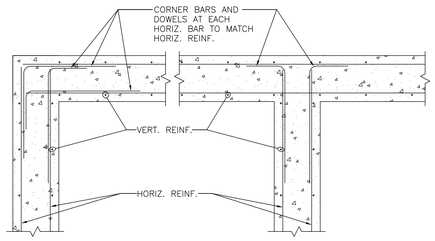

TYPICAL WALL REINF. DETAIL AT CORNERS AND INTERSECTIONS 3/4" = 1'-0" | 1 S0.03

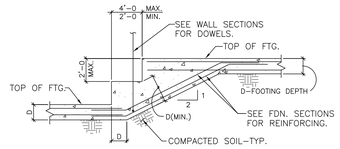

TYP. FOOTING STEP DETAIL N.T.S. | 2 S0.03

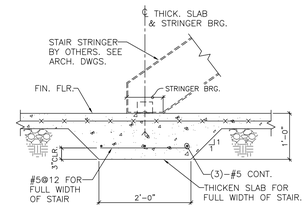

(LOCATE AT ALL STAIRS BEARING ON SLAB. SEE ARCH. DWGS. FOR STAIR LOCATIONS.)

TYP. THICKENED SLAB AT STAIRS 3/4" = 1'-0" | 3 S0.03

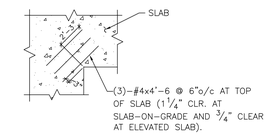

ADDITIONAL SLAB REINFORCEMENT
(SLAB ON GRADE AND ELEVATED SLABS)

RE-ENTRANT CORNER N.T.S. | 4 S0.03

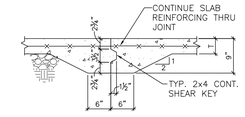

CONSTRUCTION JOINT (CONSTR. JT.) 3/4" = 1'-0" | 5 S0.03

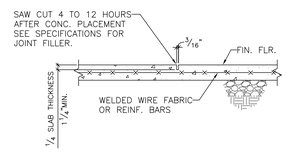

SAWED JOINT AT GRADE SLAB (C.J.) 3/4" = 1'-0" | 6 S0.03

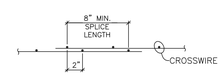

WELDED WIRE FABRIC SPLICE 1 1/2" = 1'-0" | 7 S0.03

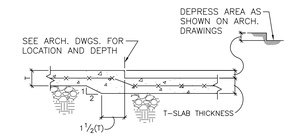

(IF REQUIRED)

SLAB ON GRADE DEPRESSION 3/4" = 1'-0" | 8 S0.03

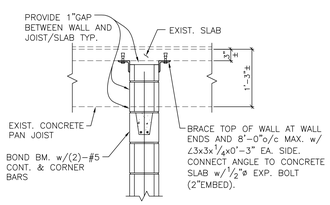

WALL BRACE DETAIL
(WALL PERPENDICULAR TO EXIST. JOIST)

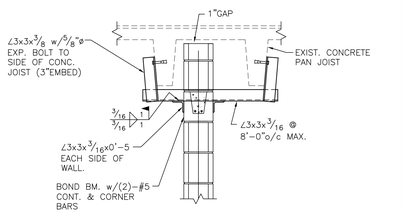

WALL BRACE DETAIL
(WALL PARALLEL TO EXIST. JOIST)

TYP. WALL BRACE AT INTERIOR NON-LOADBEARING PARTITIONS 3/4" = 1'-0" | 17 S0.03

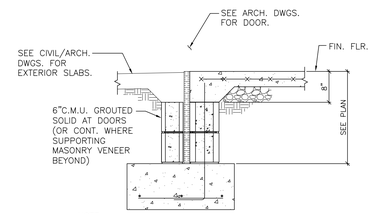

NOTE:
FOUNDATION WALL ORIENTATION ON FOOTING VARIES, SEE FOUNDATION SECTIONS FOR INFO NOT SHOWN.

FOUNDATION DETAIL AT EXTERIOR DOORS 3/4" = 1'-0" | 9 S0.03

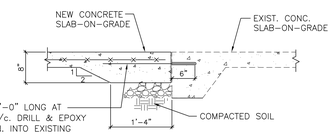

DETAIL A

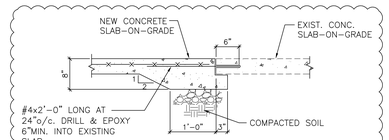

DETAIL B

NEW/EXISTING SLAB-ON-GRADE INTERFACE 3/4" = 1'-0" | 10 S0.03

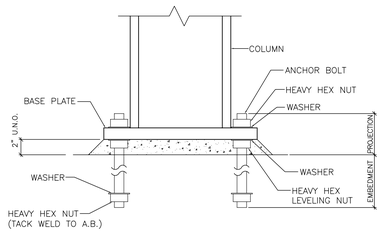

TYP. COL. BASE WITH LEVELING NUTS 3/4" = 1'-0" | 11 S0.03

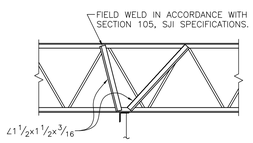

TYPICAL JOIST REINFORCEMENT FOR POINT LOADS GREATER THAN 50 lbs. AND 4" OR GREATER FROM A PANEL POINT.

(INVERT DETAIL IF POINT LOAD IS ON TOP CHORD OF JOIST TYP.)

JOIST STRENGTHENING DETAIL 3/4" = 1'-0" | 12 S0.03

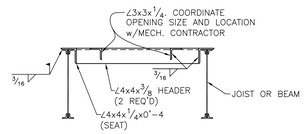

(USE IN ALL LOCATIONS WHERE ROOF OPENING IS GREATER THAN 6".)

ROOF OPENING FRAME 3/4" = 1'-0" | 13 S0.03

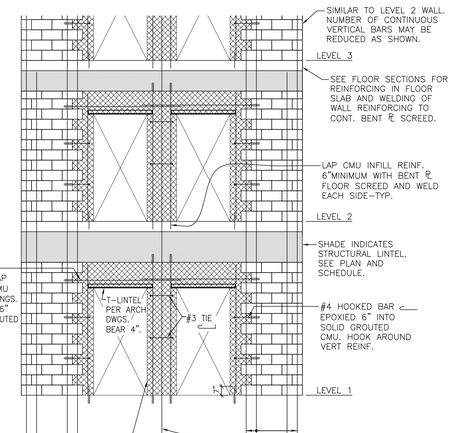

NOTES:
1. ROUGH OPENING REQUIREMENTS PER ELEVATOR MANUFACTURER. REINFORCE WALL AS SHOWN AS APPLICABLE.
2. COORDINATE CMU COURSING WITH ARCH DWGS. COURSING SHOWN IS FOR GENERAL REFERENCE.

TYPICAL WALL REINFORCING REQUIREMENTS FOR ELEVATOR DOOR OVERSIZED ROUGH OPENING 3/4" = 1'-0" | 16 S0.03

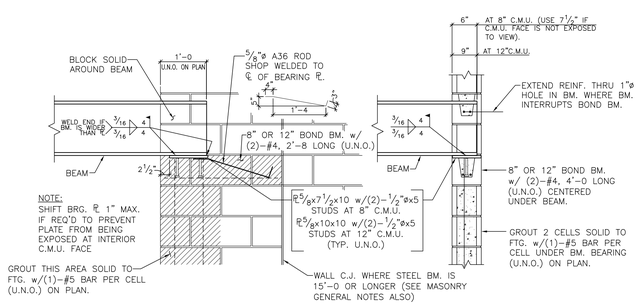

TYPICAL BEAM BEARING (U.N.O.) 3/4" = 1'-0" | 18 S0.03

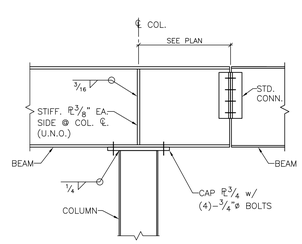

TYP. CANTILEVERED BEAM DETAIL 3/4" = 1'-0" | 14 S0.03

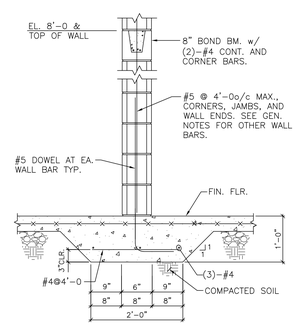

LOCATE AT ALL MASONRY PARTITION WALLS. SEE ARCH. DWGS. FOR WALL LOCATIONS.

TYPICAL THICKENED SLAB 3/4" = 1'-0" | 15 S0.03

GORDON JOHNSON Architecture
654 Hay Street, Suite 4
Fayetteville, NC 28301
Phone: (910) 223-2186
E-Mail: gordon@gordonjohnsonarchitecture.com

FLEMING & ASSOCIATES, P.A.
1004 HAY STREET
FAYETTEVILLE, NC 28305
TEL 910-433-2600
FAX 910-433-2604
www.flemingandassociates.com

NORTH CAROLINA PROFESSIONAL ENGINEER SEAL 11278 STEPHEN FLEMING 8/22/19

Fayetteville Regional Airport - Airline Terminal Improvements Part 2
400 Airport Road
Fayetteville, North Carolina 28306

TYPICAL DETAILS

DRAWN BY: SJD
REVIEWED BY: SF
DATE: 7-22-19
PROJECT NO.: 1515

REVISIONS
1 8-14-19 ADDENDUM #3
2
3

SHEET NUMBER
S0.03

#19-59

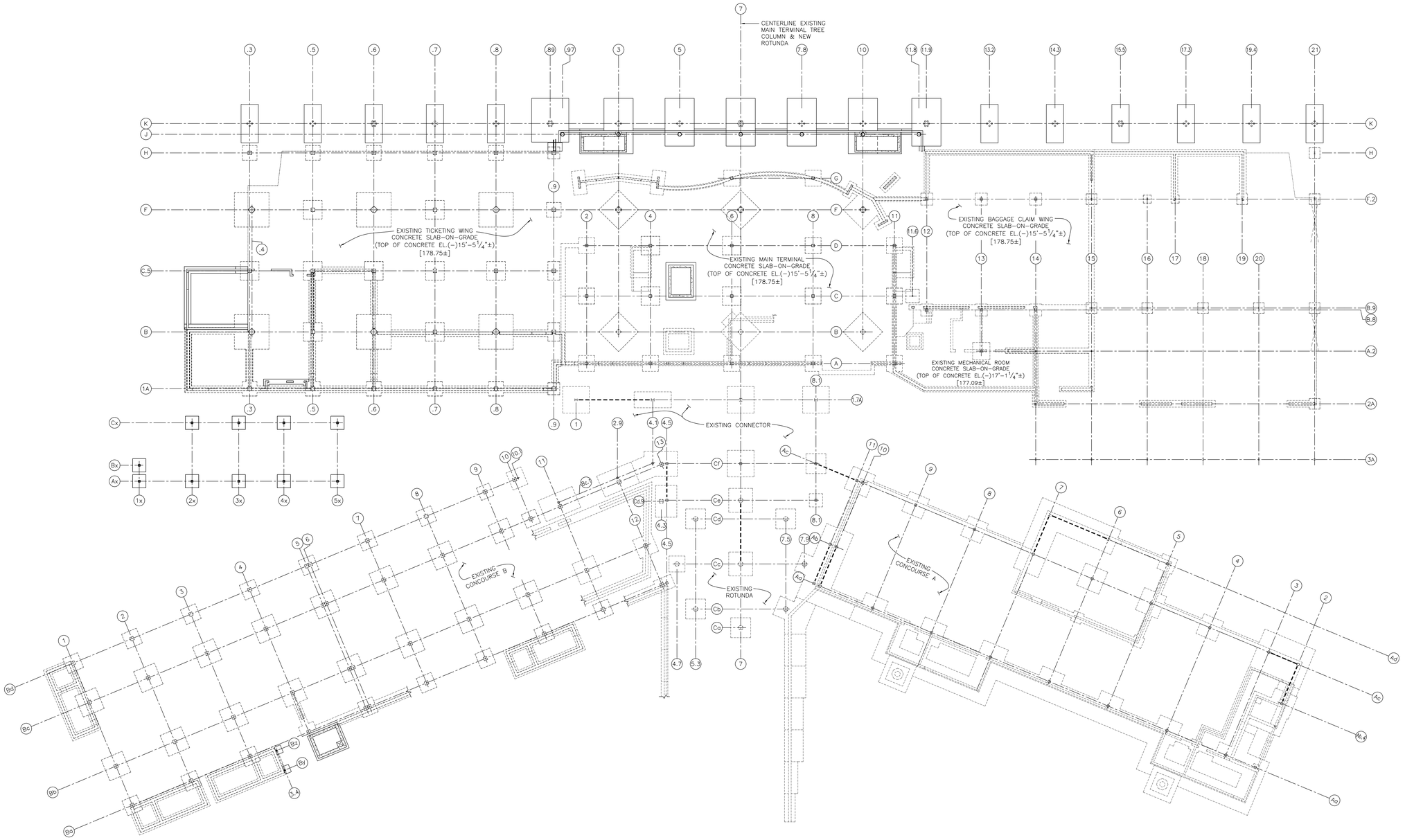

FOUNDATION PLAN – OVERALL 1 S1.00
1/16" = 1'-0"

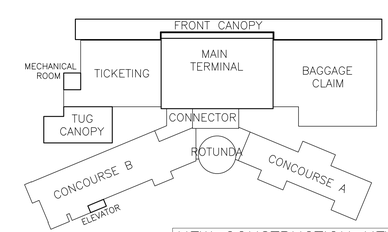

NEW CONSTRUCTION KEY PLAN
NO SCALE

GORDON JOHNSON
Architecture
654 Hay Street, Suite 4
Fayetteville, NC 28301
Phone: (910) 223-2186
E-Mail: gordon@gordonjohnsonarchitecture.com

FLEMING & ASSOCIATES, PA
1004 HAY STREET
FAYETTEVILLE, NC 28305
TEL 910-433-2600
FAX 910-433-2604
www.flemingandassociates.com

NORTH CAROLINA PROFESSIONAL ENGINEER SEAL 11278 STEPHEN FLEMING 8/22/19

Fayetteville Regional Airport - Airline Terminal Improvements Part 2

400 Airport Road
Fayetteville, North Carolina 28306

OVERALL FOUNDATION PLAN

DRAWN BY: S.JD
REVIEWED BY: SF
DATE: 7-22-19
PROJECT NO.: 1515

REVISIONS

SHEET NUMBER
S1.00

#19-59

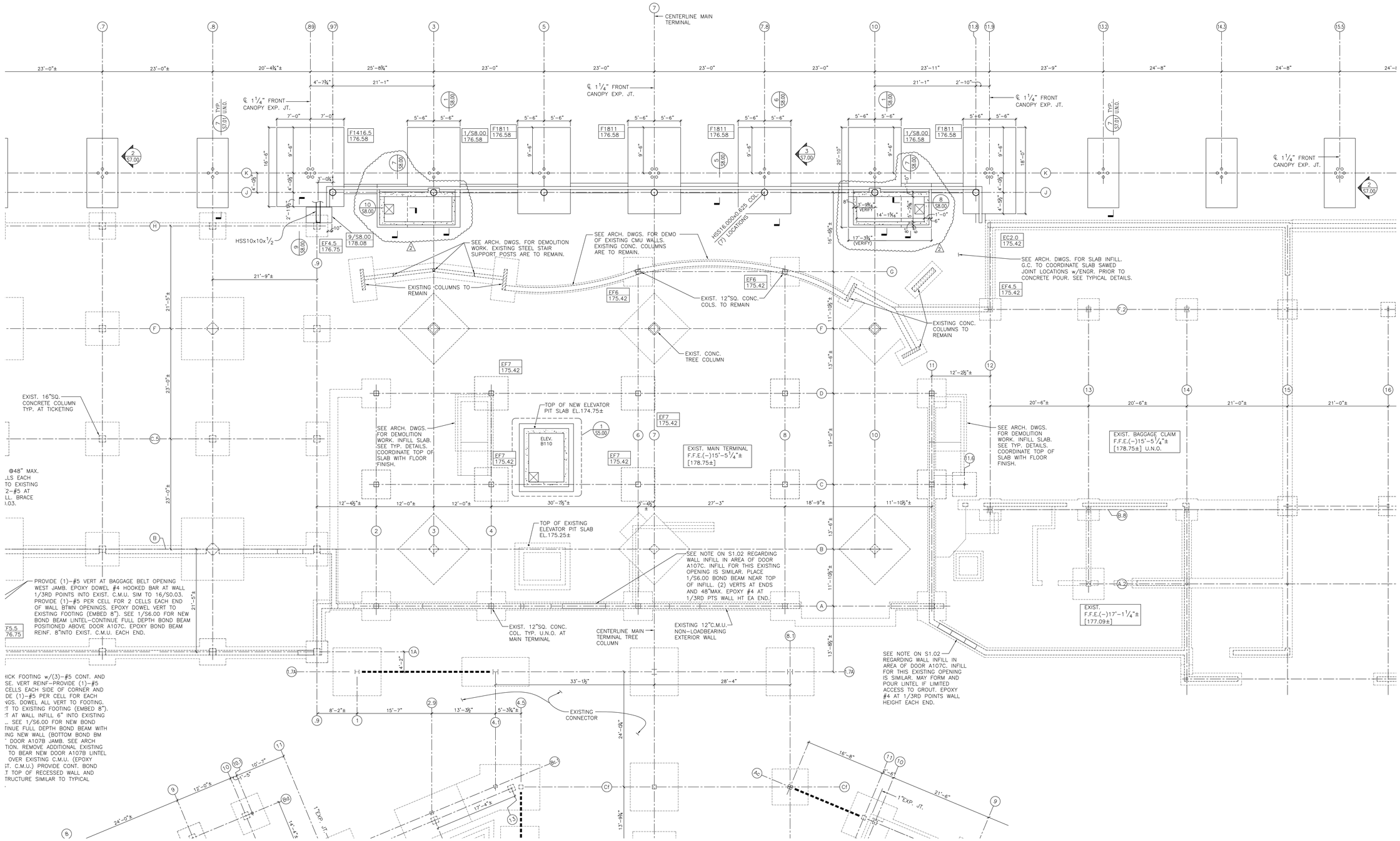

FOUNDATION PLAN – MAIN TERMINAL 1 S1.01
1/8" = 1'–0"

NEW SPREAD FOOTING SCHEDULE					
TYPE	LENGTH	WIDTH	DEPTH	REINFORCING (E.W. BOTTOM)	REINFORCING (E.W. TOP)
F1416.5	16'–6"	14'–0"	2'–6"	(14)–#8 LONG (16)–#7 SHORT	(14)–#8 LONG (16)–#7 SHORT
F1811	18'–0"	11'–0"	2'–8"	(11)–#8 LONG (19)–#6 SHORT	(11)–#8 LONG (19)–#6 SHORT

NEW SPREAD FOOTING SCHEDULE – MAIN TERMINAL 4 S1.01

9/S8.00 178.08 — REFER TO SECTION FOR FOOTING SIZE, REINF., AND SPECIAL DETAILS. — TOP OF FOOTING ELEVATION.

F1416.5 176.58 — F# – NEW SPREAD FOOTING (SEE SCHEDULE 4/S1.01). — TOP OF FOOTING ELEVATION.

EF7 175.42 — EF# – EXISTING COLUMN FOOTING; EC# – EXISTING CONT. WALL FOOTING (SEE EXISTING FOOTING SCHEDULE ON S0.01). — TOP OF FOOTING ELEVATION (±). FOOTING ELEVATIONS MUST BE FIELD VERIFIED. NOTIFY ENGINEER OF ANY SIGNIFICANT DISCREPANCIES.

PLAN LEGEND – MAIN TERMINAL 3 S1.01

FOUNDATION PLAN NOTES:

1. REFERENCE EL.0'–0" = MAIN TERMINAL 2ND LEVEL FINISH FLOOR [194.19]. FOUNDATION PLAN ELEVATIONS INDICATED ARE PER CIVIL DATUM. SEE CIVIL DRAWINGS.
2. SEE TYPICAL DETAILS ON SHEET S0.03 AND GENERAL NOTES ON SHEET S0.01.
3. ALL COLUMN FOOTINGS ARE CENTERED ON COLUMNS U.N.O. ON PLAN OR IN SECTIONS.
4. SEE ARCHITECTURAL DRAWINGS FOR DIMENSIONS NOT SHOWN. COORDINATE ALL WALL LOCATIONS WITH ARCHITECTURAL DRAWINGS.
5. VERIFY ELEVATOR AND ESCALATOR PIT SIZE AND DEPTH WITH MANUFACTURER'S BEFORE POURING FOUNDATIONS.
6. GENERAL CONTRACTOR IS RESPONSIBLE FOR FIELD VERIFYING EXISTING DIMENSIONS, ELEVATIONS, GENERAL CONDITIONS, AND BUILDING ORIENTATION BEFORE FABRICATING STEEL. EXISTING BUILDINGS MAY HAVE MINOR MISALIGNMENT BETWEEN THEM. CONTRACTOR IS RESPONSIBLE FOR MAKING MINOR ADJUSTMENTS IN ORDER TO FIT STEEL FRAME BETWEEN EXISTING BUILDINGS. NOTIFY ARCHITECT AND ENGINEER OF ANY SIGNIFICANT DISCREPANCIES. ALL ADJUSTMENTS WILL BE APPROVED BY THE ARCHITECT AND ENGINEER.
7. SEE ARCH DRAWINGS, SPECIFICATIONS, AND GENERAL NOTES FOR EXTERIOR METAL STUD WALL REQUIREMENTS. METAL STUD NC REGISTERED ENGINEER IS TO DESIGN METAL STUDS AND THEIR CONNECTIONS TO STRUCTURE FOR COMPONENTS AND CLADDING WIND LOADS.

PLAN NOTES – MAIN TERMINAL 2 S1.01

NEW CONSTRUCTION KEY PLAN
NO SCALE

GORDON JOHNSON Architecture
654 Hay Street, Suite 4
Fayetteville, NC 28301
Phone: (910) 223-2186
E-Mail: gordon@gordonjohnsonarchitecture.com

FLEMING & ASSOCIATES, PA
1004 HAY STREET
FAYETTEVILLE, NC 28305
(910) 433-2800
FAX 910-433-2804
www.flemingandassociates.com

NORTH CAROLINA PROFESSIONAL ENGINEER SEAL 11278 STEPHEN FLEMING 08/16/20

Fayetteville Regional Airport - Airline Terminal Improvements Part 2

400 Airport Road
Fayetteville, North Carolina 28306

MAIN TERMINAL FOUNDATION PLAN

DRAWN BY: S.JD
REVIEWED BY: SF
DATE: 7-22-19
PROJECT NO.: 1515

REVISIONS
1 8-14-19 ADDENDUM #3
2 7-16-20 ESCALATOR REV.
3

SHEET NUMBER
S1.0

#19-59

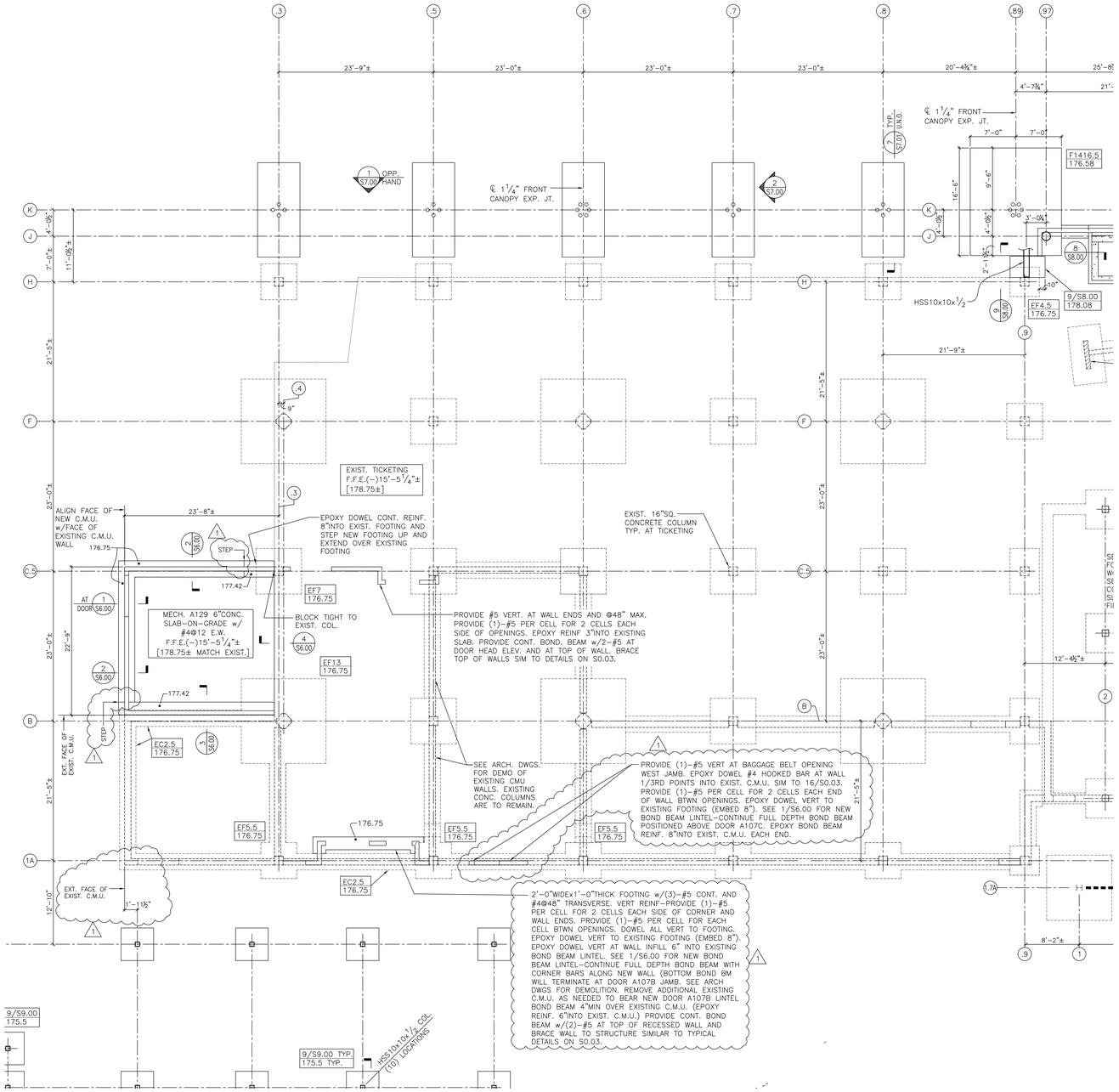

FOUNDATION PLAN – TICKETING 1 S1.02
1/8" = 1'-0"

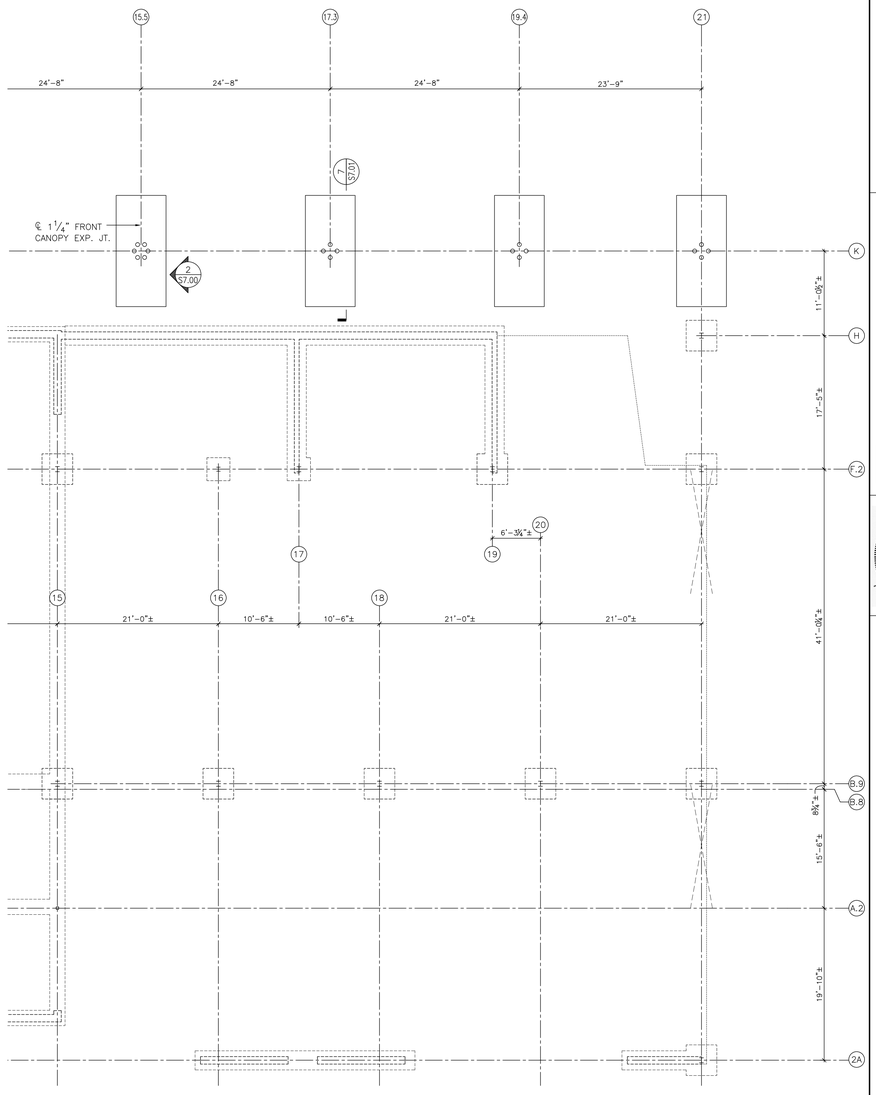

FOUNDATION PLAN – BAGGAGE CLAIM 2 S1.02
1/8" = 1'-0"

9/S8.00 178.08	REFER TO SECTION FOR FOOTING SIZE, REINF., AND SPECIAL DETAILS.
	TOP OF FOOTING ELEVATION.
F1416.5 176.58	F# – NEW SPREAD FOOTING (SEE SCHEDULE ON S1.01).
	TOP OF FOOTING ELEVATION.
EF5.5 176.75	EF# – EXISTING COLUMN FOOTING EC# – EXISTING CONT. WALL FOOTING (SEE EXISTING FOOTING SCHEDULE ON S0.01).
	TOP OF FOOTING ELEVATION (±). FOOTING ELEVATIONS MUST BE FIELD VERIFIED. NOTIFY ENGINEER OF ANY SIGNIFICANT DISCREPANCIES.
STEP	DENOTES FOOTING STEP. SEE TYPICAL DETAIL ON S0.03.
176.75 —•	DENOTES TOP OF FOOTING ELEVATION

PLAN LEGEND 3 S1.02

FOUNDATION PLAN NOTES:

1. REFERENCE EL.0'-0" = MAIN TERMINAL 2ND LEVEL FINISH FLOOR [194.19]. FOUNDATION PLAN ELEVATIONS INDICATED ARE PER CIVIL DATUM. SEE CIVIL DRAWINGS.
2. SEE TYPICAL DETAILS ON SHEET S0.03 AND GENERAL NOTES ON SHEET S0.01.
3. ALL COLUMN FOOTINGS ARE CENTERED ON COLUMNS U.N.O. ON PLAN OR IN SECTIONS.
4. SEE ARCHITECTURAL DRAWINGS FOR DIMENSIONS NOT SHOWN. COORDINATE ALL WALL LOCATIONS WITH ARCHITECTURAL DRAWINGS.
5. GENERAL CONTRACTOR IS RESPONSIBLE FOR FIELD VERIFYING EXISTING DIMENSIONS, ELEVATIONS, GENERAL CONDITIONS, AND BUILDING ORIENTATION BEFORE FABRICATING STEEL. EXISTING BUILDINGS MAY HAVE MINOR MISALIGNMENT BETWEEN THEM. CONTRACTOR IS RESPONSIBLE FOR MAKING MINOR ADJUSTMENTS IN ORDER TO FIT STEEL FRAME BETWEEN EXISTING BUILDINGS. NOTIFY ARCHITECT AND ENGINEER OF ANY SIGNIFICANT DISCREPANCIES. ALL ADJUSTMENTS WILL BE APPROVED BY THE ARCHITECT AND ENGINEER.
6. SEE ARCH DRAWINGS, SPECIFICATIONS, AND GENERAL NOTES FOR EXTERIOR METAL STUD WALL REQUIREMENTS. METAL STUD NC REGISTERED ENGINEER IS TO DESIGN METAL STUDS AND THEIR CONNECTIONS TO STRUCTURE FOR 100 MPH COMPONENTS AND CLADDING WIND LOADS.

PLAN NOTES 4 S1.02

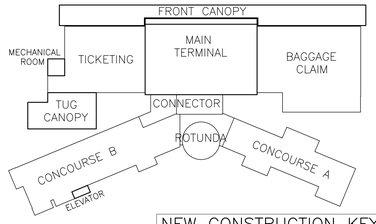

NEW CONSTRUCTION KEY PLAN
NO SCALE

GORDON JOHNSON
Architecture
654 Hay Street, Suite 4
Fayetteville, NC 28301
Phone: (910) 223-2186
E-Mail: gordon@gordonjohnsonarchitecture.com

FLEMING & ASSOCIATES, PA
1004 HAY STREET
FAYETTEVILLE, NC 28305
TEL 910-433-2600
FAX 910-433-2604
www.flemingandassociates.com

NORTH CAROLINA PROFESSIONAL ENGINEER SEAL 11278 STEPHEN FLEMING 09/22/19

Fayetteville Regional Airport - Airline Terminal Improvements Part 2

400 Airport Road
Fayetteville, North Carolina 28306

TICKETING AND BAGGAGE CLAIM
FOUNDATION PLANS

DRAWN BY: SJD
REVIEWED BY: SF
DATE: 7-22-19
PROJECT NO.: 1515

REVISIONS
1 8-14-19 ADDENDUM #3
2
3

SHEET NUMBER
S1.02

#19-59

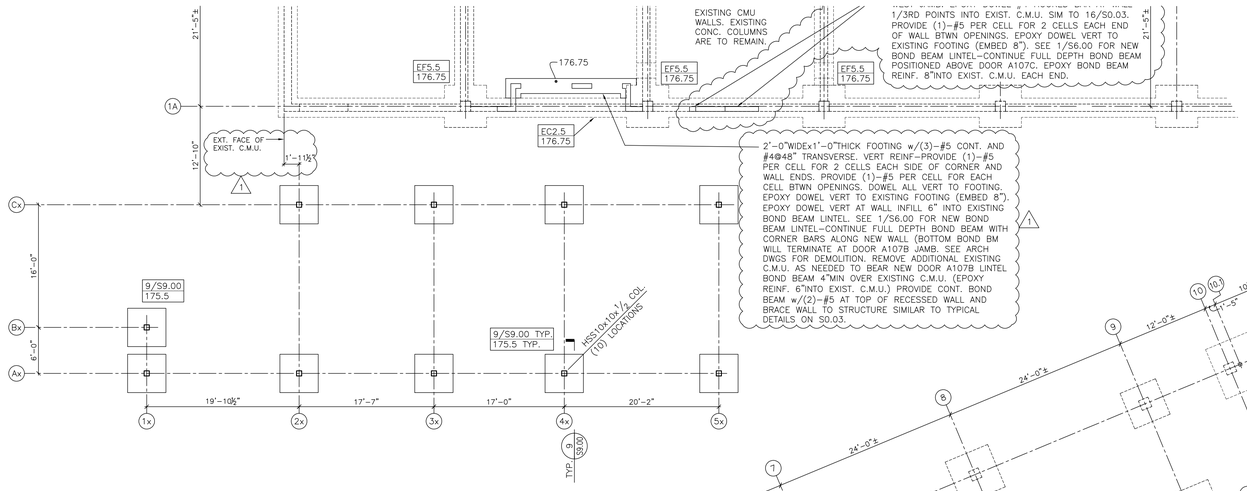

TUG CANOPY NOTES:
1. ALL ELEVATIONS AT TUG CANOPY ARE REFERENCED TO FINISH FLOOR ELEVATION 178.75 = EL.0'-0.
2. ALL TUG CANOPY STEEL AND FASTENERS ARE TO BE HOT-DIP-GALVANIZED.
3. SEE GENERAL NOTES ON SHEET S0.01 AND TYPICAL DETAILS ON SHEET S0.03.
4. GENERAL CONTRACTOR WILL LOCATE ALL EXISTING UTILITIES BEFORE BEGINNING FOUNDATION EXCAVATIONS. SOME UTILITIES MAY NEED TO BE RELOCATED. EXISTING UTILITIES SHALL NOT BE LOCATED UNDER FOOTINGS.

TUG CANOPY NOTES 5 S1.03
NO SCALE

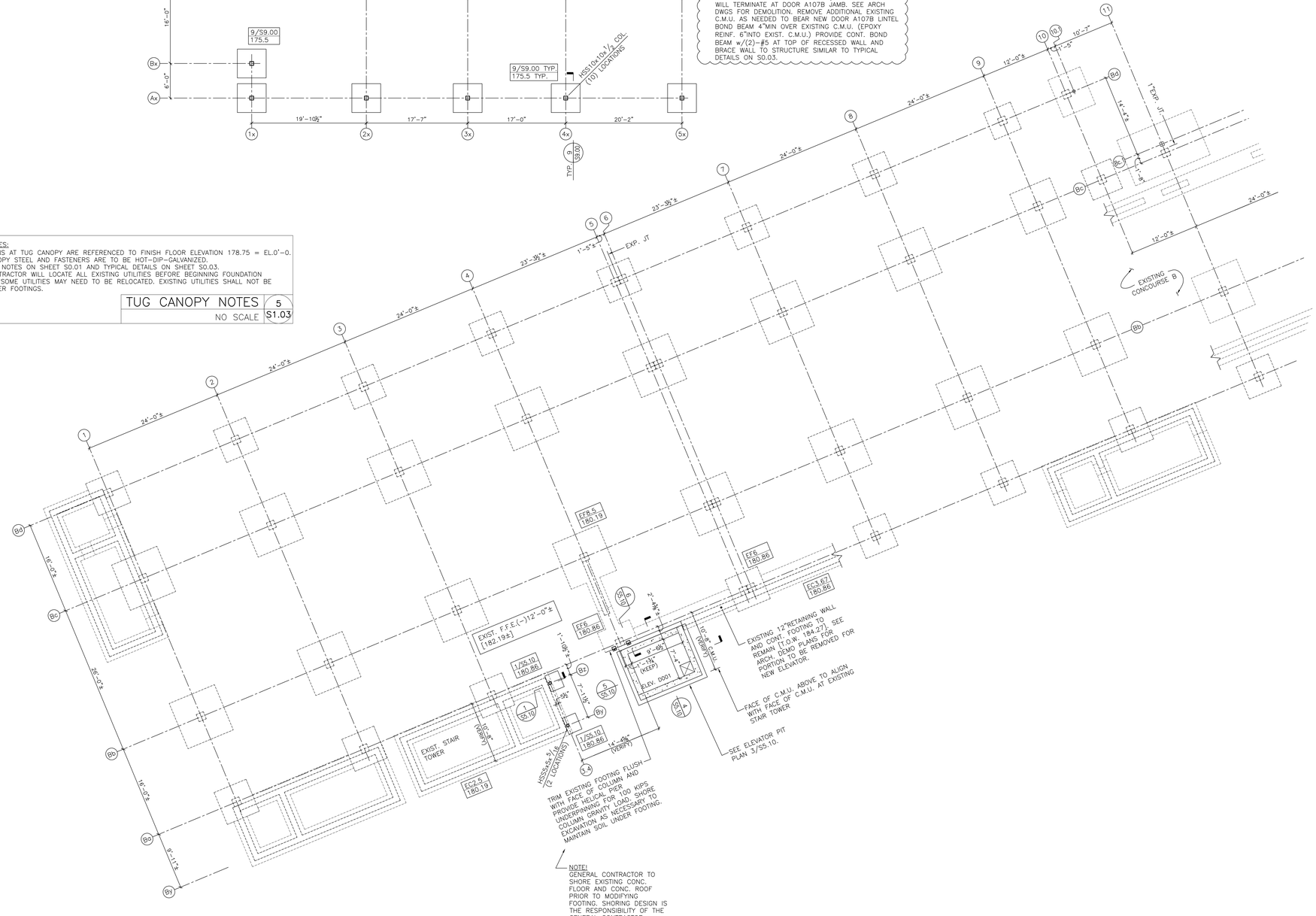

FOUNDATION PLANS – CONCOURSE B ELEVATOR D001 & TICKETING TUG CANOPY 1/8" = 1'-0" 1 S1.03

FOUNDATION PLAN NOTES:
1. REFERENCE EL.0'-0" = MAIN TERMINAL 2ND LEVEL FINISH FLOOR [194.19]. FOUNDATION PLAN ELEVATIONS INDICATED ARE PER CIVIL DATUM. SEE CIVIL DRAWINGS.
2. SEE TYPICAL DETAILS ON SHEET S0.03 AND GENERAL NOTES ON SHEET S0.01.
3. ALL COLUMN FOOTINGS ARE CENTERED ON COLUMNS U.N.O. ON PLAN OR IN SECTIONS.
4. DIMENSIONS SHOWN ON PLAN AND SECTIONS ARE TO EXISTING C.M.U. WALLS AND STRUCTURAL CONCRETE BEAMS AND COLUMNS AND NOT TO EXISTING ARCHITECTURAL WALL FINISHES. SEE ARCHITECTURAL DRAWINGS FOR DIMENSIONS NOT SHOWN. COORDINATE ALL WALL LOCATIONS WITH ARCHITECTURAL DRAWINGS.
5. VERIFY ELEVATOR PIT SIZE AND DEPTH WITH MANUFACTURER's BEFORE POURING FOUNDATIONS AND FABRICATING STEEL.
6. GENERAL CONTRACTOR IS RESPONSIBLE FOR FIELD VERIFYING EXISTING DIMENSIONS, ELEVATIONS, GENERAL CONDITIONS, AND BUILDING ORIENTATION BEFORE FABRICATING STEEL. EXISTING BUILDINGS MAY HAVE MINOR MISALIGNMENT BETWEEN THEM. CONTRACTOR IS RESPONSIBLE FOR MAKING MINOR ADJUSTMENTS IN ORDER TO FIT STEEL FRAME BETWEEN EXISTING BUILDINGS. NOTIFY ARCHITECT AND ENGINEER OF ANY SIGNIFICANT DISCREPANCIES. ALL ADJUSTMENTS WILL BE APPROVED BY THE ARCHITECT AND ENGINEER.
7. SEE ARCH DRAWINGS, SPECIFICATIONS, AND GENERAL NOTES FOR EXTERIOR METAL STUD WALL REQUIREMENTS. METAL STUD NC REGISTERED ENGINEER IS TO DESIGN METAL STUDS AND THEIR CONNECTIONS TO STRUCTURE/FOR COMPONENTS AND CLADDING WIND LOADS.

PLAN NOTES 2 S1.03

GENERAL UNDERPINNING / SOIL SHORING NOTES:
1. ALL EXISTING DIMENSIONS, ELEVATIONS, AND CONDITIONS SHOWN ARE TO BE FIELD VERIFIED BEFORE BEGINNING WORK. NOTIFY STRUCTURAL ENGINEER OF ANY SIGNIFICANT DISCREPANCIES.
2. PROVIDE SEALED UNDERPINNING/SOIL SHORING DETAILS AND CALCULATIONS PREPARED BY A REGISTERED NC ENGINEER FOR REVIEW BEFORE INSTALLING UNDERPINNING/SHORING. CONSIDER ACCESSIBILITY LIMITATIONS WHEN SELECTING TYPE OF UNDERPINNING/SOIL SHORING.
3. CONTRACTOR IS TO BE LICENSED, INSURED, AND CERTIFIED FOR THE TYPE OF FOUNDATION UNDERPINNING AND/OR SOIL SHORING REQUIRED. CONTRACTOR IS TO HAVE A MINIMUM OF 5-YEARS EXPERIENCE IN INSTALLATION OF THE REQUIRED TYPE OF UNDERPINNING/SOIL SHORING. CONTRACTOR IS TO PROVIDE DOCUMENTATION OF CERTIFICATION AND EXPERIENCE RECORD PRIOR TO COMMENCING WORK.
4. SEE GEOTECHNICAL REPORT DATED OCTOBER 30, 2015 (AND NOVEMBER 9, 2015 ADDENDUM) BY GEOTECHNOLOGIES, INC. (PROJECT #1-15-0630-EA) FOR SUBSURFACE SOILS INFORMATION.

CONCOURSE B – UNDERPINNING NOTES 3 S1.03

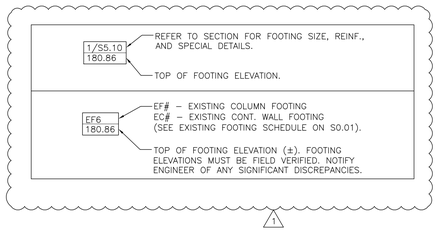

PLAN LEGEND 4 S1.03

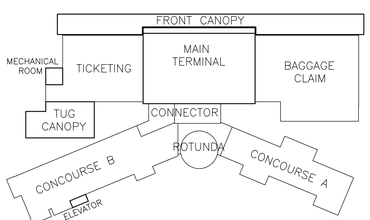

NEW CONSTRUCTION KEY PLAN
NO SCALE

GORDON JOHNSON Architecture
654 Hay Street, Suite 4
Fayetteville, NC 28301
Phone: (910) 223-2186
E-Mail: gordon@gordonjohnsonarchitecture.com

FLEMING & ASSOCIATES, PA
1004 HAY STREET
FAYETTEVILLE, NC 28305
PHONE 910-433-2600
FAX 910-433-2604
www.flemingandassociates.com

NORTH CAROLINA PROFESSIONAL ENGINEER SEAL 11278 STEPHEN FLEMING
7/22/19

Fayetteville Regional Airport - Airline Terminal Improvements Part 2
400 Airport Road
Fayetteville, North Carolina 28306

CONCOURSE B ELEVATOR D001 & TICKETING TUG CANOPY
FOUNDATION PLANS

DRAWN BY: SJD
REVIEWED BY: SF
DATE: 7-22-19
PROJECT NO.: 1515

REVISIONS
1 8-14-19 ADDENDUM #3
2
3

SHEET NUMBER
S1.03

#19-59

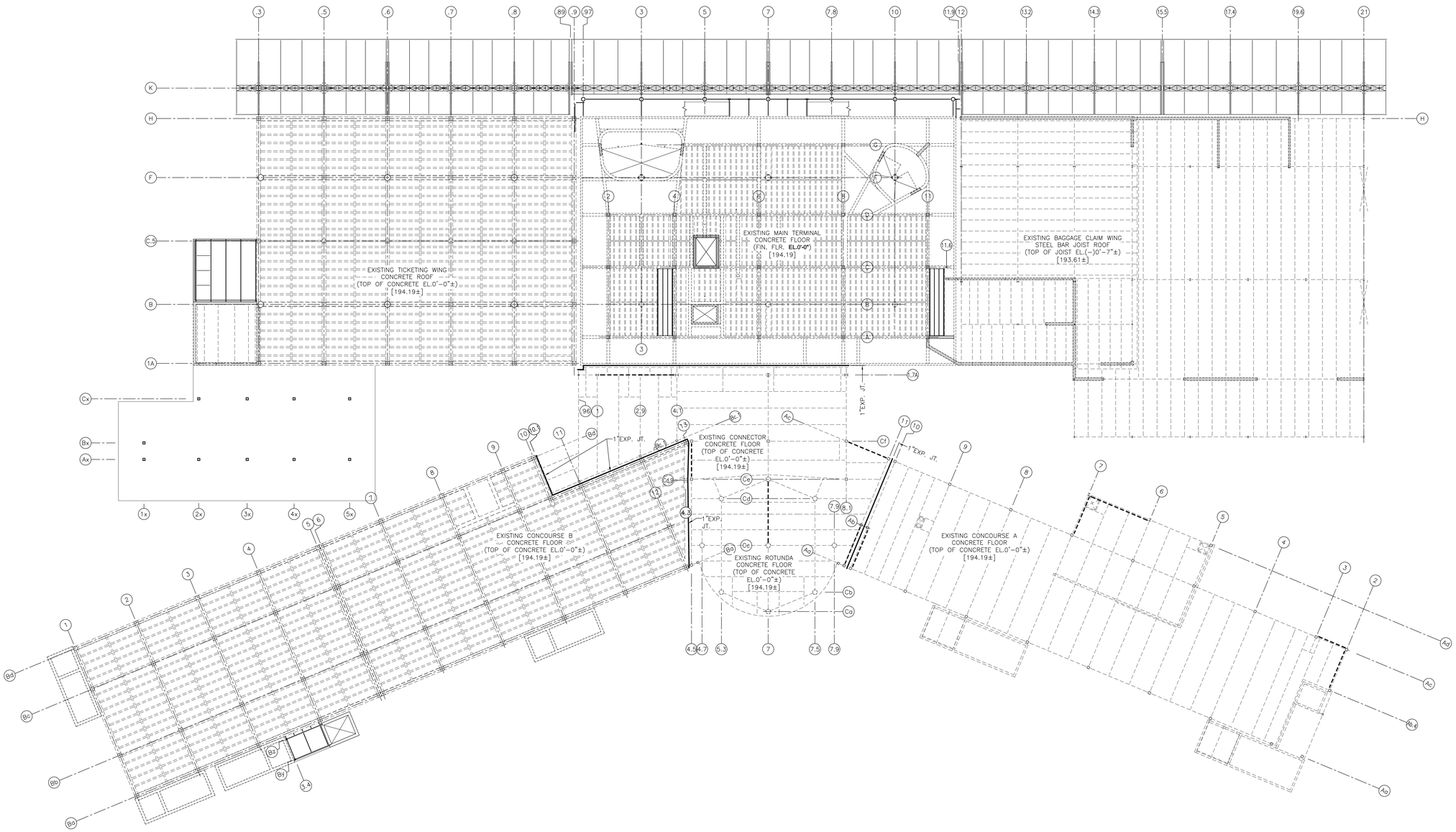

FLOOR & LOW ROOF FRAMING PLANS – OVERALL 2ND LEVEL
1/16" = 1'-0"
1 S2.00

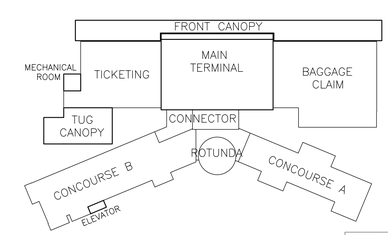

KEY PLAN
NO SCALE

GORDON JOHNSON
Architecture
654 Hay Street, Suite 4
Fayetteville, NC 28301
Phone: (910) 223-2186
E-Mail: gordon@gordonjohnsonarchitecture.com

FLEMING & ASSOCIATES, PA
1004 HAY STREET
FAYETTEVILLE, NC 28305
PHONE 910-323-2000
FAX 910-433-2604
www.flemingandassociates.com

NORTH CAROLINA PROFESSIONAL ENGINEER SEAL 11278 STEPHEN FLEMING

Fayetteville Regional Airport - Airline Terminal Improvements Part 2

400 Airport Road
Fayetteville, North Carolina 28306

OVERALL 2ND LEVEL
FLOOR & LOW ROOF FRAMING PLANS

DRAWN BY: SJD
REVIEWED BY: SF
DATE: 7-22-19
PROJECT NO.: 1515

REVISIONS

SHEET NUMBER
S2.00

#19-59

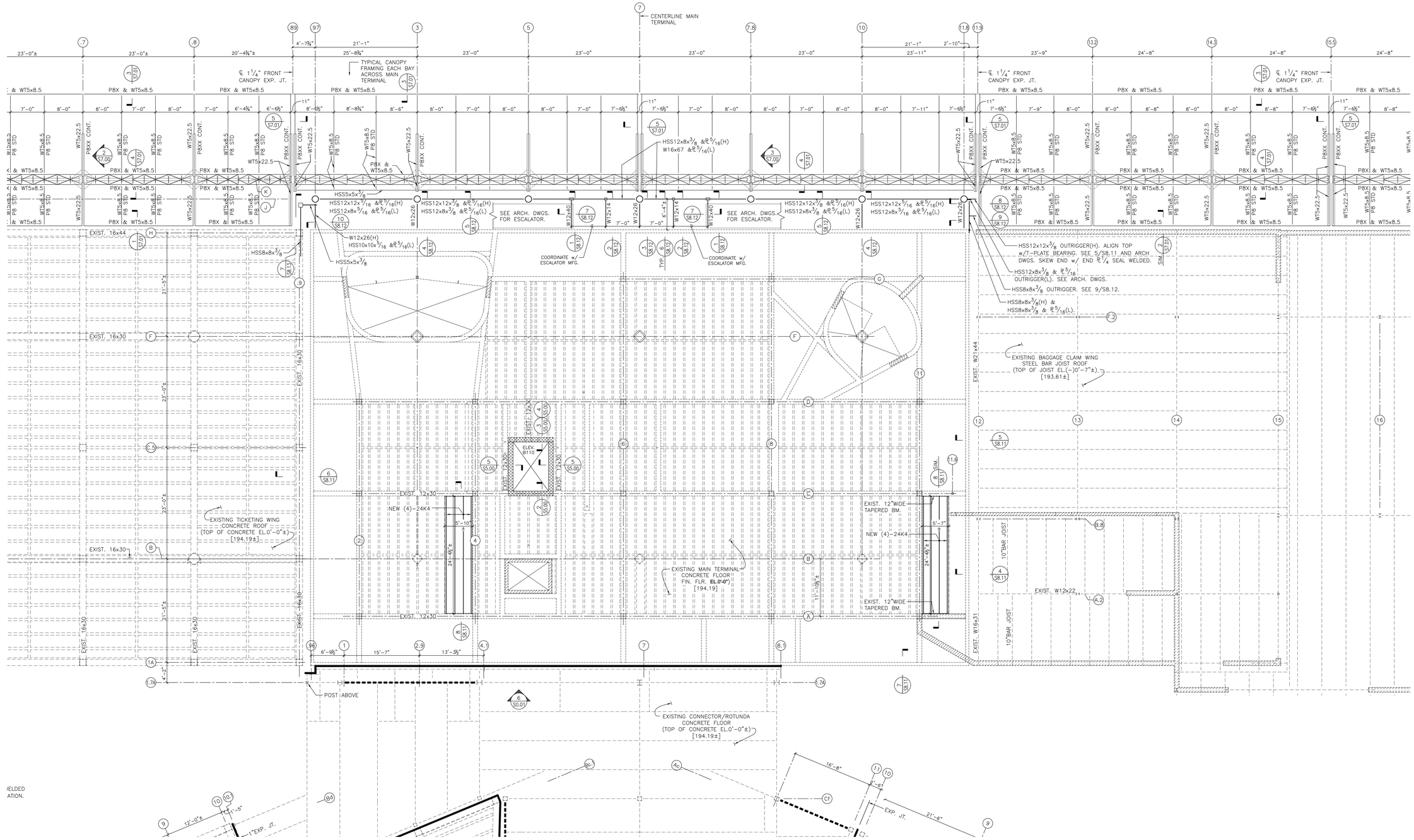

FLOOR & LOW ROOF FRAMING PLANS – MAIN TERMINAL 2ND LEVEL (1 / S2.01)
1/8" = 1'-0"

FRAMING PLAN NOTES:

1. REFERENCE EL.0'-0" = MAIN TERMINAL 2ND LEVEL FINISH FLOOR [194.19]. GENERAL CONTRACTOR IS TO FIELD VERIFY 2ND LEVEL ELEVATION BEFORE FABRICATING STEEL AND PROVIDE SMOOTH TRANSITION ACROSS THE INTERFACE. NOTIFY ARCHITECT/ENGINEER OF ANY SIGNIFICANT DISCREPANCIES.
2. SEE GENERAL NOTES ON SHEET S0.01 AND TYPICAL DETAILS ON SHEET S0.03.
3. SEE FRAMED BEAM CONNECTION TABLE.
4. SEE ARCHITECTURAL DRAWINGS FOR DIMENSIONS NOT SHOWN.
5. GENERAL CONTRACTOR IS RESPONSIBLE FOR FIELD VERIFYING EXISTING DIMENSIONS, ELEVATIONS, GENERAL CONDITIONS, AND BUILDING ORIENTATION BEFORE FABRICATING STEEL. EXISTING BUILDINGS MAY HAVE MINOR MISALIGNMENT BETWEEN THEM. CONTRACTOR IS RESPONSIBLE FOR MAKING MINOR ADJUSTMENTS IN ORDER TO FIT STEEL FRAME BETWEEN AND ALONG EXISTING BUILDINGS. NOTIFY ARCHITECT AND ENGINEER OF ANY SIGNIFICANT DISCREPANCIES. ALL ADJUSTMENTS WILL BE APPROVED BY THE ARCHITECT AND ENGINEER.

PLAN NOTES (3 / S2.01)
NO SCALE

(H) OR (L)	INDICATES HIGH OR LOW, RESPECTIVELY
(*)	TOP OF BEAM IN PLANE OF ROOF DECK

PLAN LEGEND (2 / S2.01)

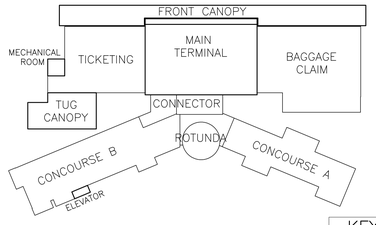

KEY PLAN
NO SCALE

GORDON JOHNSON Architecture
654 Hay Street, Suite 4
Fayetteville, NC 28301
Phone: (910) 223-2166
E-Mail: gordon@gordonjohnsonarchitecture.com

FLEMING & ASSOCIATES, PA
1004 HAY STREET
FAYETTEVILLE, NC 28305
(910) 433-2600
FAX 910-433-2604
www.flemingandassociates.com

NORTH CAROLINA PROFESSIONAL ENGINEER SEAL 11278 STEPHEN FLEMING

Fayetteville Regional Airport - Airline Terminal Improvements Part 2

400 Airport Road
Fayetteville, North Carolina 28306

MAIN TERMINAL 2ND LEVEL
FLOOR & LOW ROOF FRAMING PLANS

DRAWN BY: S.JD
REVIEWED BY: SF
DATE: 1-22-19
PROJECT NO.: 1515

REVISIONS

SHEET NUMBER
S2.01

#19-59

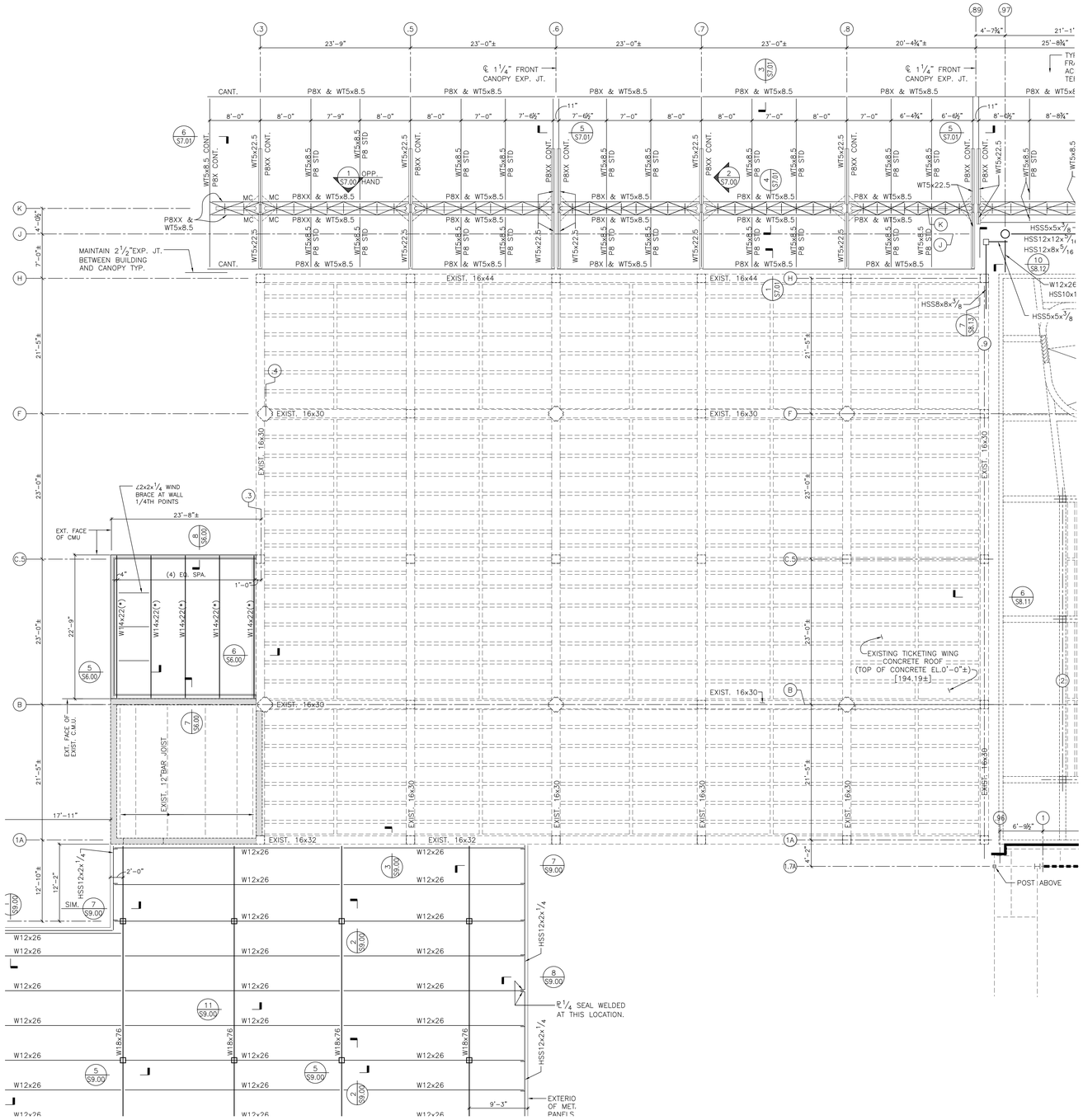

ROOF FRAMING PLAN – TICKETING (1) S2.02
1/8" = 1'-0"

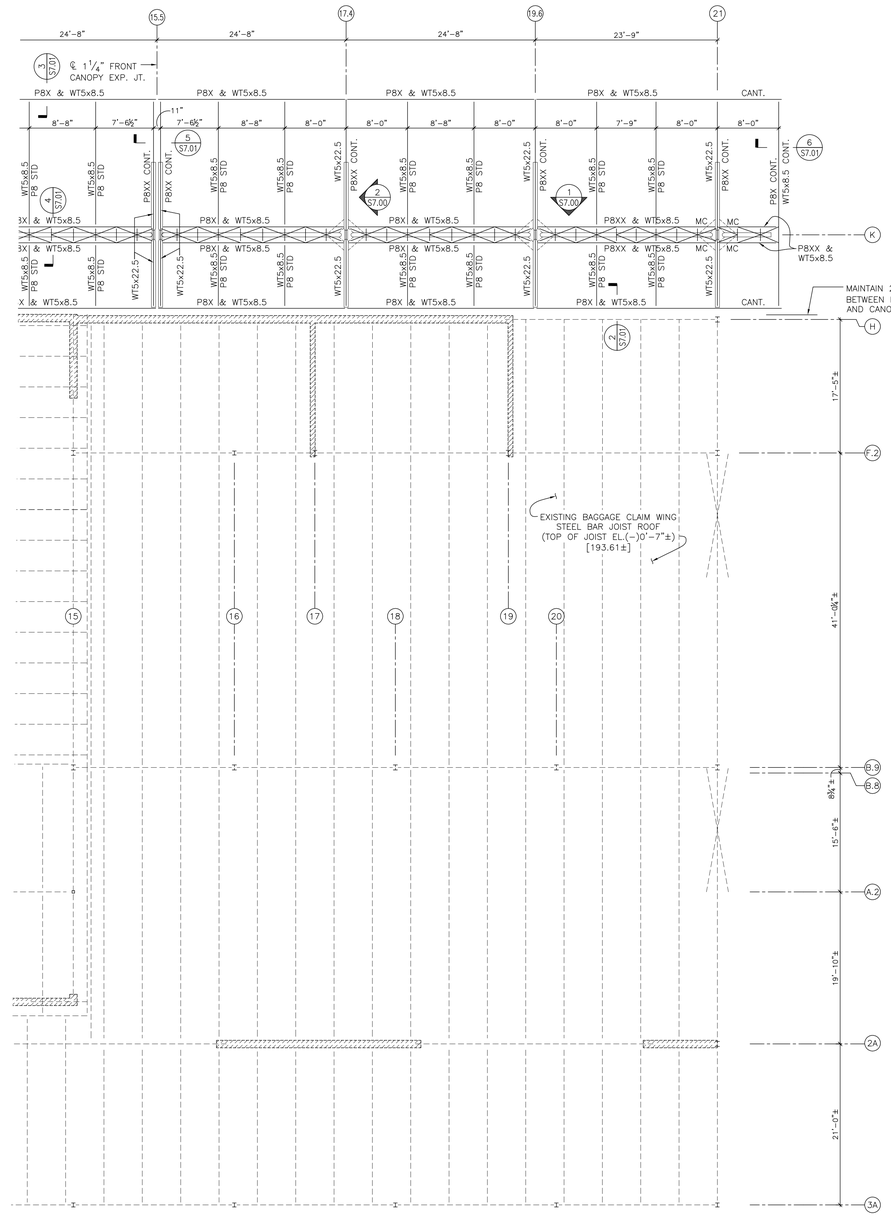

ROOF FRAMING PLANS – BAGGAGE CLAIM (2) S2.02
1/8" = 1'-0"

ROOF FRAMING PLAN NOTES:

1. REFERENCE EL.0'-0" = MAIN TERMINAL 2ND LEVEL FINISH FLOOR [194.19].
2. SEE GENERAL NOTES ON SHEET S0.01 AND TYPICAL DETAILS ON SHEET S0.03.
3. SEE ARCHITECTURAL DRAWINGS FOR DIMENSIONS NOT SHOWN.
4. GENERAL CONTRACTOR IS RESPONSIBLE FOR FIELD VERIFYING EXISTING DIMENSIONS, ELEVATIONS, GENERAL CONDITIONS, AND BUILDING ORIENTATION BEFORE FABRICATING STEEL. EXISTING BUILDINGS MAY HAVE MINOR MISALIGNMENT BETWEEN THEM. CONTRACTOR IS RESPONSIBLE FOR MAKING MINOR ADJUSTMENTS IN ORDER TO FIT STEEL FRAME BETWEEN AND ALONG EXISTING BUILDINGS. NOTIFY ARCHITECT AND ENGINEER OF ANY SIGNIFICANT DISCREPANCIES. ALL ADJUSTMENTS WILL BE APPROVED BY THE ARCHITECT AND ENGINEER.
5. SEE ARCHITECTURAL AND MECHANICAL DRAWINGS FOR ROOF OPENINGS. PROVIDE ROOF OPENING FRAMES PER TYPICAL DETAIL ON SHEET S0.03.

PLAN NOTES (4) S2.02
NO SCALE

(*) TOP OF BEAM IN PLANE OF ROOF DECK

PLAN LEGEND (3) S2.02

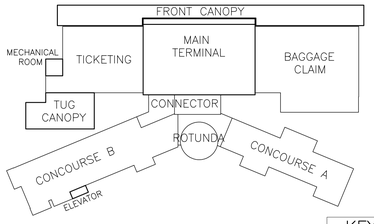

KEY PLAN
NO SCALE

GORDON JOHNSON
Architecture
654 Hay Street, Suite 4
Fayetteville, NC 28301
Phone: (910) 223-2166
E-Mail: gordon@gordonjohnsonarchitecture.com

FLEMING & ASSOCIATES, PA
1004 HAY STREET
FAYETTEVILLE, NC 28305
(910) 433-2600
FAX 910-433-2604
www.flemingandassociates.com

NORTH CAROLINA PROFESSIONAL ENGINEER SEAL 11278 STEPHEN FLEMING
7/22/19

Fayetteville Regional Airport - Airline Terminal Improvements Part 2

TICKETING AND BAGGAGE CLAIM
ROOF FRAMING PLANS

400 Airport Road
Fayetteville, North Carolina 28306

DRAWN BY: SJD
REVIEWED BY: SF
DATE: 7-22-19
PROJECT NO.: 1515

REVISIONS

SHEET NUMBER
S2.02

#19-59

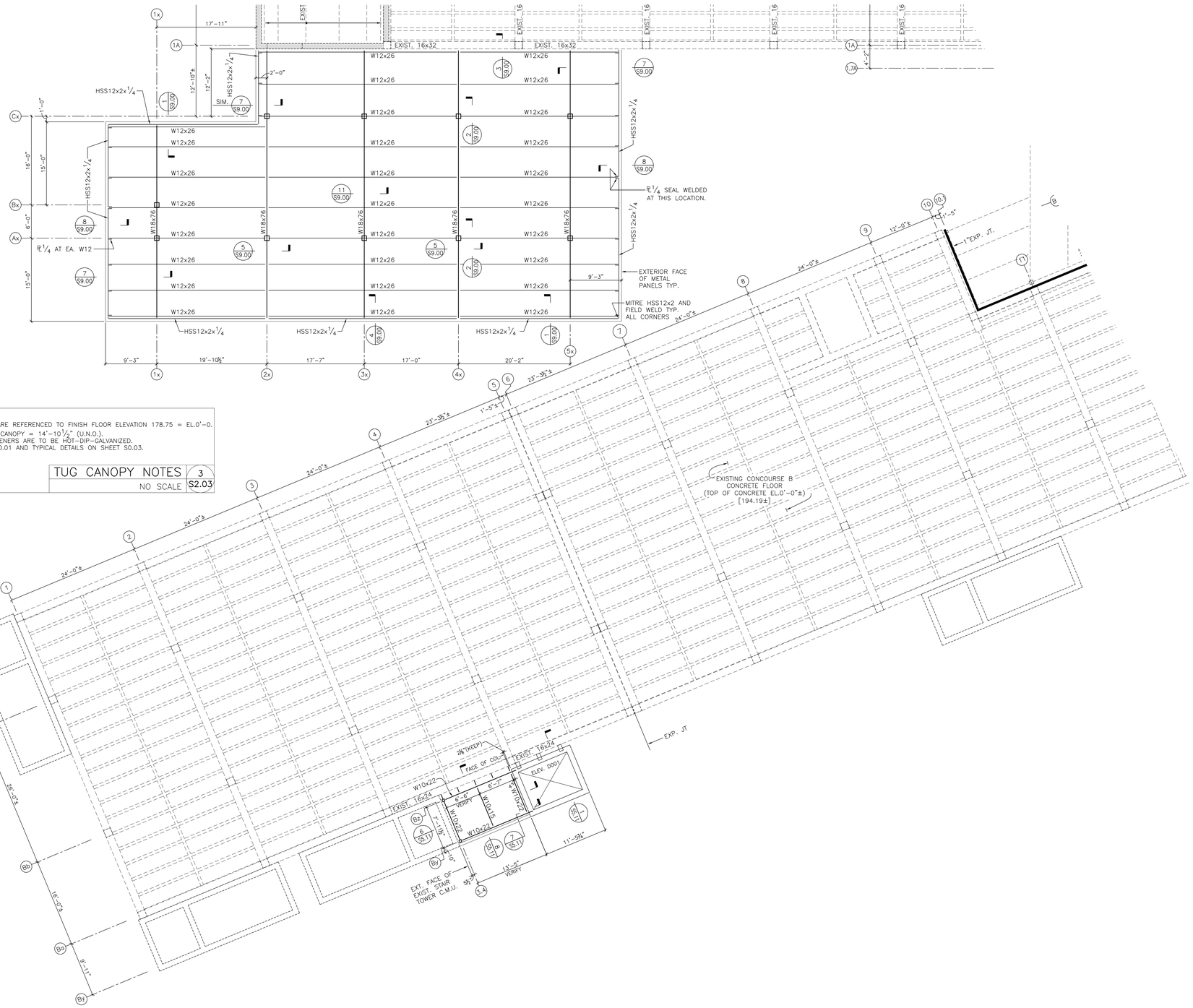

TUG CANOPY NOTES:

1. ALL ELEVATIONS AT TUG CANOPY ARE REFERENCED TO FINISH FLOOR ELEVATION 178.75 = EL.0'-0.
2. TOP OF STEEL ELEVATION AT TUG CANOPY = 14'-10 1/2" (U.N.O.).
3. ALL TUG CANOPY STEEL AND FASTENERS ARE TO BE HOT-DIP-GALVANIZED.
4. SEE GENERAL NOTES ON SHEET S0.01 AND TYPICAL DETAILS ON SHEET S0.03.

TUG CANOPY NOTES 3 S2.03
NO SCALE

FLOOR FRAMING PLAN NOTES:

1. REFERENCE EL.0'-0" = MAIN TERMINAL 2ND LEVEL FINISH FLOOR [194.19]. SEE ARCH. DWGS. FOR FIN. FLR. ELEVATION, RECESSED SLABS, FLOOR TOPPINGS AND FLOOR SLOPES. GENERAL CONTRACTOR IS TO FIELD VERIFY 2ND LEVEL ELEVATION BEFORE FABRICATING STEEL AND PROVIDE SMOOTH TRANSITION ACROSS THE INTERFACE. NOTIFY ARCHITECT/ENGINEER OF ANY SIGNIFICANT DISCREPANCIES.
2. TOP OF STEEL BEAM ELEVATION AT NEW 2ND FLOOR = (-)0'-5 1/4" UNLESS NOTED THUS [ ] ON PLAN.
3. SEE FRAMED BEAM CONNECTION TABLE.
4. SEE GENERAL NOTES ON SHEET S0.01 AND TYPICAL DETAILS ON SHEET S0.03.
5. DIMENSIONS SHOWN ON PLAN AND SECTIONS ARE TO EXISTING C.M.U. WALLS AND STRUCTURAL CONCRETE BEAMS AND COLUMNS AND NOT TO EXISTING ARCHITECTURAL WALL FINISHES. SEE ARCHITECTURAL DRAWINGS FOR DIMENSIONS NOT SHOWN. COORDINATE ALL WALL LOCATIONS WITH ARCHITECTURAL DRAWINGS.
6. GENERAL CONTRACTOR IS RESPONSIBLE FOR FIELD VERIFYING EXISTING DIMENSIONS, ELEVATIONS, GENERAL CONDITIONS, AND BUILDING ORIENTATION BEFORE FABRICATING STEEL. CONTRACTOR IS RESPONSIBLE FOR MAKING MINOR ADJUSTMENTS IN ORDER TO FIT STEEL FRAME IN CORNER OF EXISTING BUILDING. NOTIFY ARCHITECT AND ENGINEER OF ANY SIGNIFICANT DISCREPANCIES. ALL ADJUSTMENTS WILL BE APPROVED BY THE ARCHITECT AND ENGINEER.
7. SEE ARCH DRAWINGS, SPECIFICATIONS, AND GENERAL NOTES FOR EXTERIOR METAL STUD WALL REQUIREMENTS. METAL STUD NC REGISTERED ENGINEER IS TO DESIGN METAL STUDS AND THEIR CONNECTIONS TO STRUCTURE FOR COMPONENTS AND CLADDING WIND LOADS.

PLAN NOTES 2 S2.03
NO SCALE

FLOOR FRAMING PLAN – CONCOURSE B 1 S2.03
1/8" = 1'-0"

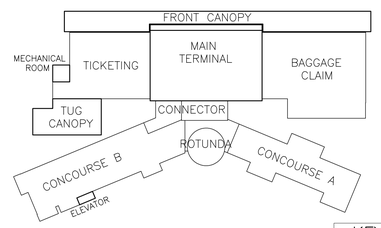

KEY PLAN
NO SCALE

GORDON JOHNSON
Architecture
654 Hay Street, Suite 4
Fayetteville, NC 28301
Phone: (910) 223-2186
E-Mail: gordon@gordonjohnsonarchitecture.com

FLEMING & ASSOCIATES, PA
1004 HAY STREET
FAYETTEVILLE, NC 28305
(910) 433-2600
FAX 910-433-2604
www.flemingandassociates.com

NORTH CAROLINA PROFESSIONAL ENGINEER SEAL 11278 STEPHEN FLEMING
09/22/19

Fayetteville Regional Airport - Airline Terminal Improvements Part 2

400 Airport Road
Fayetteville, North Carolina 28306

CONCOURSE B ELEVATOR D001 FLOOR FRAMING & TICKETING TUG CANOPY ROOF FRAMING PLANS

DRAWN BY: SJD
REVIEWED BY: SF
DATE: 1-22-19
PROJECT NO.: 1515

REVISIONS

SHEET NUMBER
S2.03

#19-59

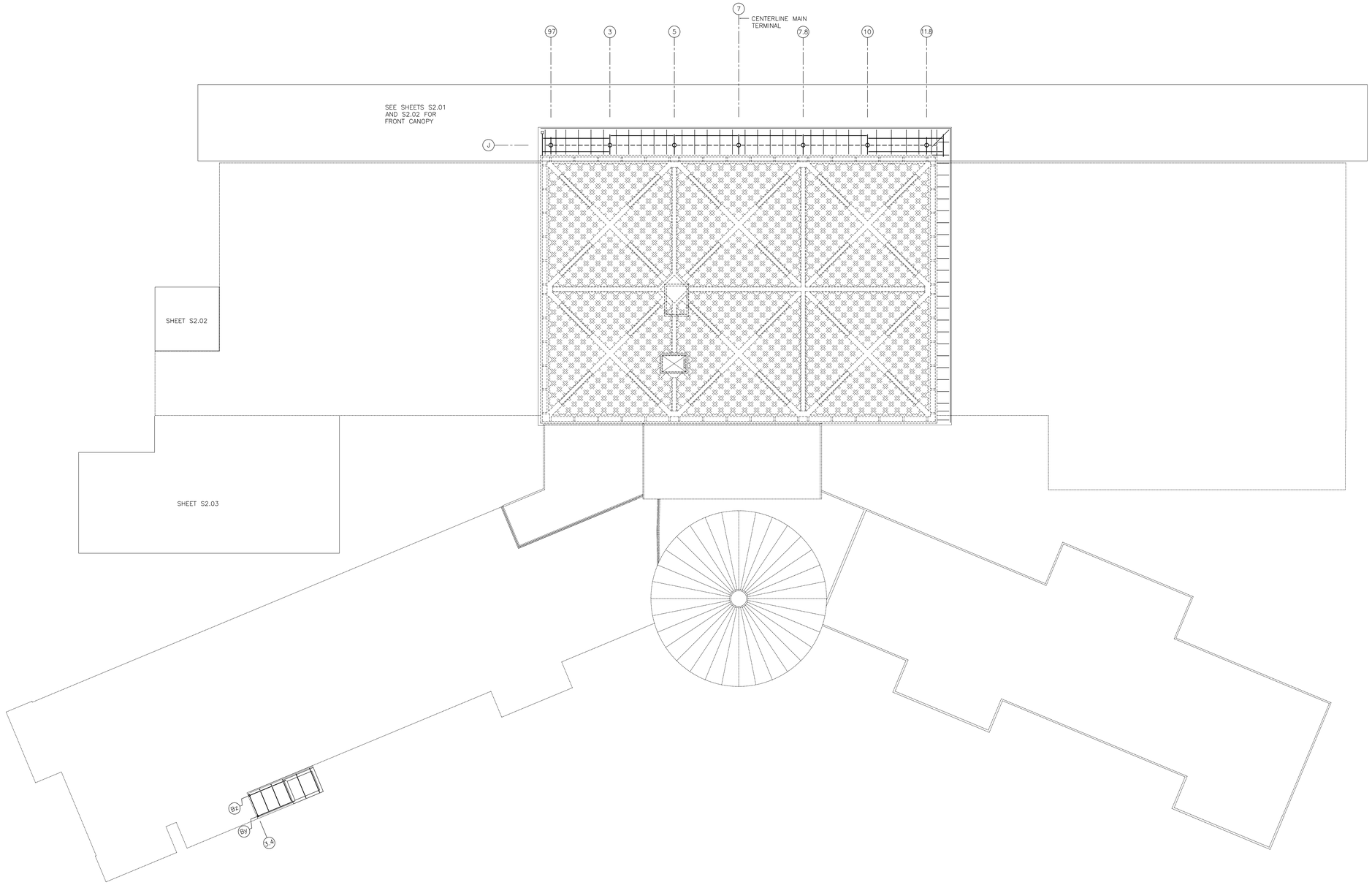

LOW ROOF FRAMING PLAN – OVERALL (1 / S3.00)
1/16" = 1'-0"

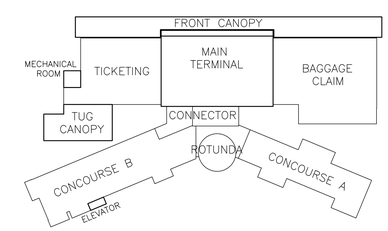

KEY PLAN
NO SCALE

GORDON JOHNSON
Architecture
654 Hay Street, Suite 4
Fayetteville, NC 28301
Phone: (910) 223-2186
E-Mail: gordon@gordonjohnsonarchitecture.com

FLEMING & ASSOCIATES, PA
1004 HAY STREET
FAYETTEVILLE, NC 28305
TEL 910-433-2600
FAX 910-433-2604
www.flemingandassociates.com

NORTH CAROLINA PROFESSIONAL ENGINEER SEAL 11278 STEPHEN FLEMING
9/22/19

Fayetteville Regional Airport - Airline Terminal Improvements Part 2

400 Airport Road
Fayetteville, North Carolina 28306

OVERALL
ROOF FRAMING PLAN

DRAWN BY: SJD
REVIEWED BY: SF
DATE: 7-22-19
PROJECT NO.: 15/5

REVISIONS

SHEET NUMBER
S3.00

#19-59

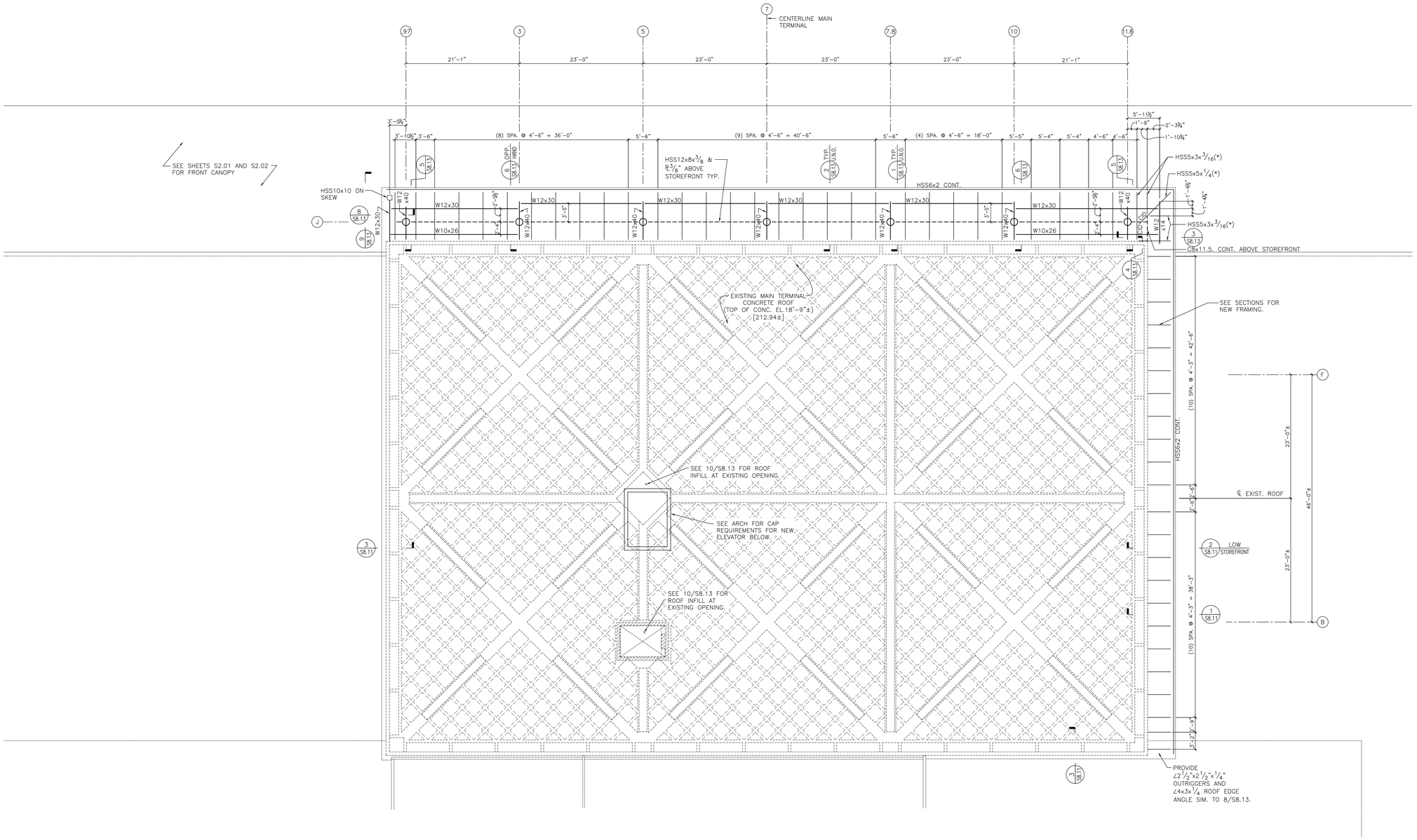

NEW ROOF FRAMING PLAN – MAIN TERMINAL (1/S3.01)
1/8" = 1'-0"

FRAMING PLAN NOTES:

1. REFERENCE EL.0'-0" = MAIN TERMINAL 2ND LEVEL FINISH FLOOR [194.19]. TOP OF NEW METAL DECK TO ALIGN WITH EXISTING TOP OF CONCRETE.
2. SEE FRAMED BEAM CONNECTION TABLE.
3. SEE GENERAL NOTES ON SHEET S0.01 AND TYPICAL DETAILS ON SHEET S0.03.
4. SEE ARCHITECTURAL DRAWINGS FOR DIMENSIONS NOT SHOWN.
5. SEE ARCHITECTURAL DRAWINGS FOR DEMOLITION WORK.
6. GENERAL CONTRACTOR IS RESPONSIBLE FOR FIELD VERIFYING AND/OR DETERMINING EXISTING DIMENSIONS, ELEVATIONS, GENERAL CONDITIONS, AND BUILDING ORIENTATION BEFORE FABRICATING STEEL. EXISTING BUILDINGS MAY HAVE MINOR MISALIGNMENT BETWEEN THEM. CONTRACTOR IS RESPONSIBLE FOR MAKING MINOR ADJUSTMENTS IN ORDER TO FIT STEEL FRAME BETWEEN AND ALONG EXISTING BUILDINGS. NOTIFY ARCHITECT AND ENGINEER OF ANY SIGNIFICANT DISCREPANCIES. ALL ADJUSTMENTS WILL BE APPROVED BY THE ARCHITECT AND ENGINEER.
7. CAP OPEN ENDS OF HSS w/PL1/4" AND SEAL WELD TYP. U.N.O.

PLAN NOTES (3/S3.01)
NO SCALE

CID	CHANGE IN DECK DIRECTION. PROVIDE 9"WIDE, 20 GA COVER PLATE SCREWED TO EACH DECK FLUTE OR 6"o/c.
(H) OR (L)	HIGH OR LOW, RESPECTIVELY
(*)	TOP OF BEAM IN PLANE OF ROOF DECK

PLAN LEGEND (2/S3.01)

GORDON JOHNSON
Architecture
654 Hay Street, Suite 4
Fayetteville, NC 28301
Phone: (910) 223-2186
E-Mail: gordon@gordonjohnsonarchitecture.com

FLEMING & ASSOCIATES, PA
1004 HAY STREET
FAYETTEVILLE, NC 28305
TEL 910-433-2600
FAX 910-433-2604
www.flemingandassociates.com

NORTH CAROLINA PROFESSIONAL SEAL 11278 ENGINEER STEPHEN FLEMING
10/22/19

Fayetteville Regional Airport - Airline Terminal Improvements Part 2

400 Airport Road
Fayetteville, North Carolina 28306

MAIN TERMINAL
ROOF FRAMING PLAN

DRAWN BY: S.JD
REVIEWED BY: SF
DATE: 1-22-19
PROJECT NO.: 1515

REVISIONS

SHEET NUMBER
S3.01

#19-59

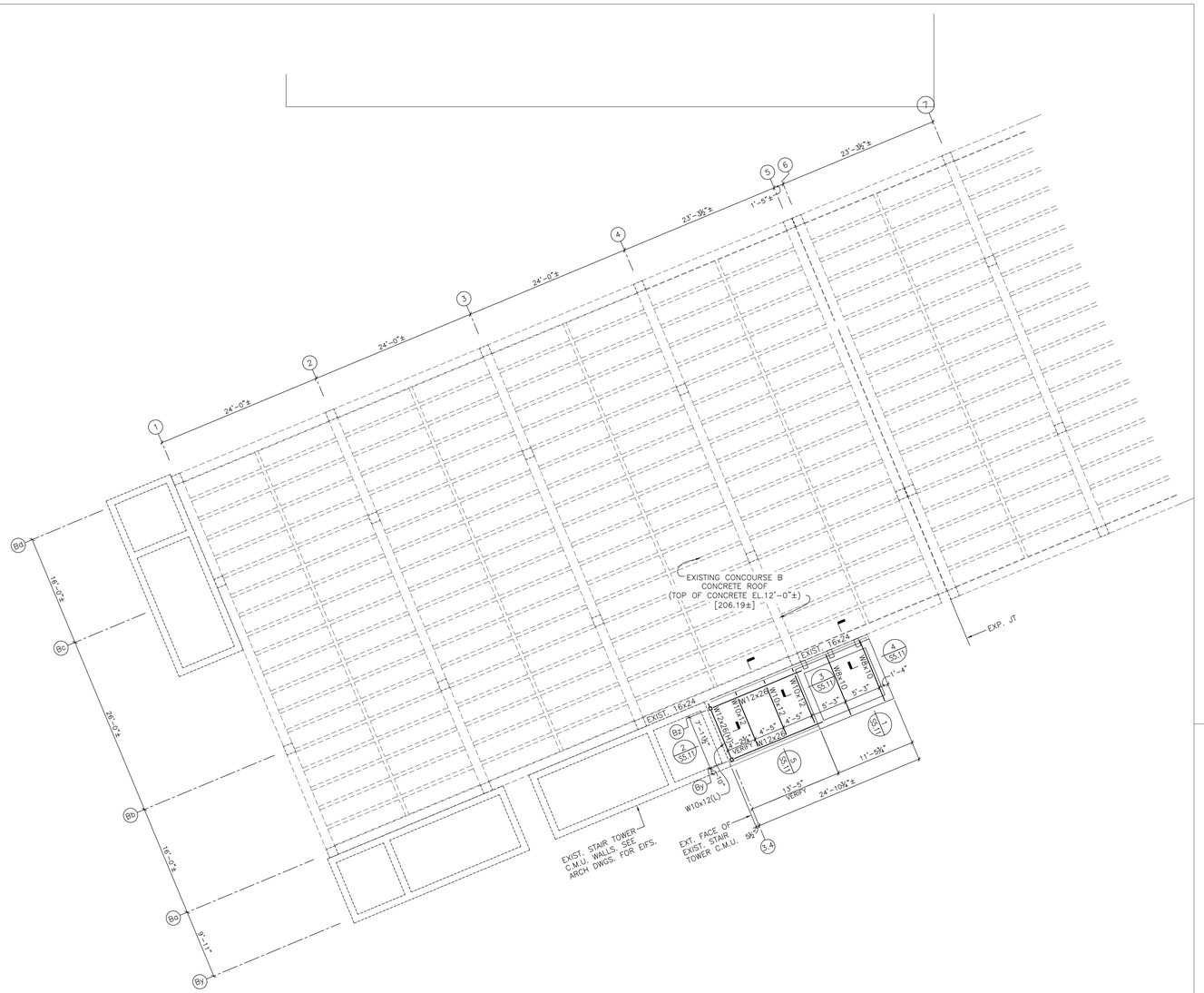

ROOF FRAMING PLAN – CONCOURSE B (1 / S3.02)
1/8" = 1'-0"

(H) OR (L)	HIGH OR LOW, RESPECTIVELY
(•)	TOP OF BEAM IN PLANE OF ROOF DECK

PLAN LEGEND (2 / S3.02)

FRAMING PLAN NOTES:

1. REFERENCE EL.0'-0" = MAIN TERMINAL 2ND LEVEL FINISH FLOOR [194.19].
2. SEE FRAMED BEAM CONNECTION TABLE.
3. SEE GENERAL NOTES ON SHEET S0.01 AND TYPICAL DETAILS ON SHEET S0.03.
4. DIMENSIONS SHOWN ON PLAN AND SECTIONS ARE TO EXISTING C.M.U. WALLS AND STRUCTURAL CONCRETE BEAMS AND COLUMNS AND NOT TO EXISTING ARCHITECTURAL WALL FINISHES. SEE ARCHITECTURAL DRAWINGS FOR DIMENSIONS NOT SHOWN. COORDINATE ALL WALL LOCATIONS WITH ARCHITECTURAL DRAWINGS.
5. GENERAL CONTRACTOR IS RESPONSIBLE FOR FIELD VERIFYING/DETERMINING EXISTING DIMENSIONS, ELEVATIONS, GENERAL CONDITIONS, AND BUILDING ORIENTATION BEFORE FABRICATING STEEL. EXISTING BUILDINGS MAY HAVE MINOR MISALIGNMENT BETWEEN THEM. CONTRACTOR IS RESPONSIBLE FOR MAKING MINOR ADJUSTMENTS IN ORDER TO FIT STEEL FRAME BETWEEN AND ALONG EXISTING BUILDINGS. NOTIFY ARCHITECT AND ENGINEER OF ANY SIGNIFICANT DISCREPANCIES. ALL ADJUSTMENTS WILL BE APPROVED BY THE ARCHITECT AND ENGINEER.

PLAN NOTES (3 / S3.02)
NO SCALE

GORDON JOHNSON
Architecture
654 Hay Street, Suite 4
Fayetteville, NC 28301
Phone: (910) 223-2186
E-Mail: gordon@gordonjohnsonarchitecture.com

FLEMING & ASSOCIATES, PA
1004 HAY STREET
FAYETTEVILLE, NC 28305
TEL 910-433-2600
FAX 910-433-2604
www.flemingandassociates.com

NORTH CAROLINA PROFESSIONAL ENGINEER SEAL 11278 STEPHEN FLEMING
07/22/19

Fayetteville Regional Airport - Airline Terminal Improvements Part 2

400 Airport Road
Fayetteville, North Carolina 28306

CONCOURSE B ELEVATOR D001
ROOF FRAMING PLAN

DRAWN BY: SJD
REVIEWED BY: SF
DATE: 7-22-19
PROJECT NO.: 1515

REVISIONS

SHEET NUMBER
S3.02

#19-59

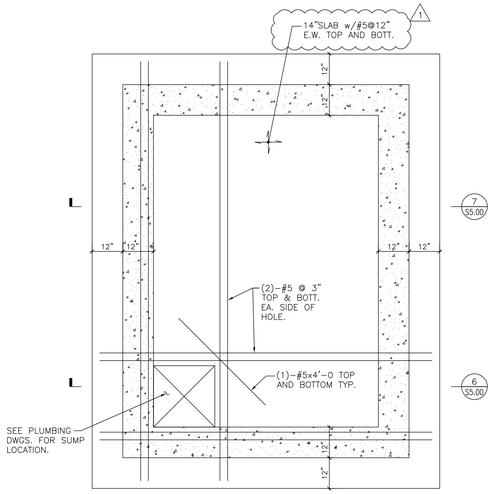

ELEVATOR B110 PIT PLAN 1 S5.00
1/2" = 1'-0"

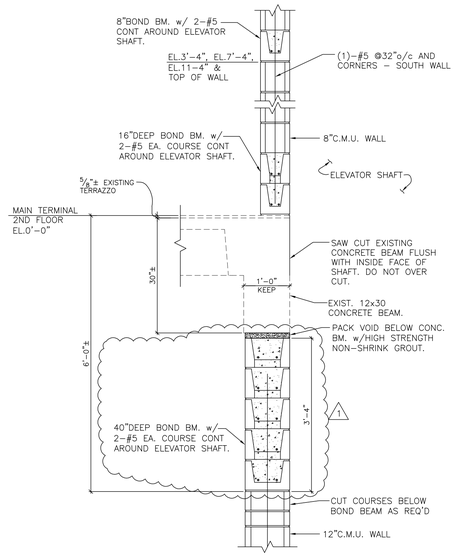

SOUTH WALL OF ELEVATOR B110 2 S5.00
3/4" = 1'-0"

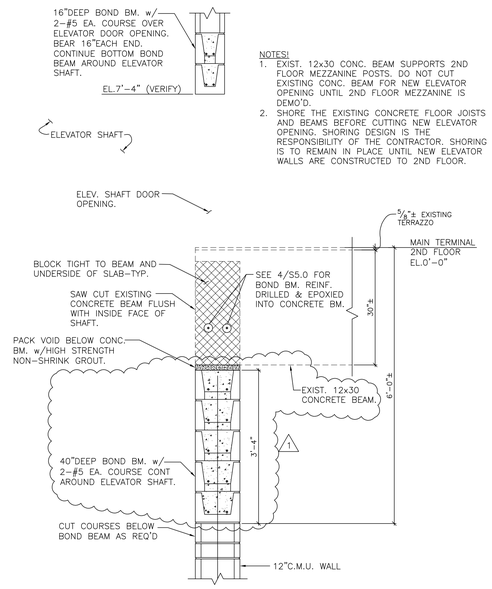

NOTES:
1. EXIST. 12x30 CONC. BEAM SUPPORTS 2ND FLOOR MEZZANINE POSTS. DO NOT CUT EXISTING CONC. BEAM FOR NEW ELEVATOR OPENING UNTIL 2ND FLOOR MEZZANINE IS DEMO'D.
2. SHORE THE EXISTING CONCRETE FLOOR JOISTS AND BEAMS BEFORE CUTTING NEW ELEVATOR OPENING. SHORING DESIGN IS THE RESPONSIBILITY OF THE CONTRACTOR. SHORING IS TO REMAIN IN PLACE UNTIL NEW ELEVATOR WALLS ARE CONSTRUCTED TO 2ND FLOOR.

NORTH WALL OF ELEVATOR B110
EXISTING 30" DEEP CONC. BM. BRG. 3/4" = 1'-0" 3 S5.00

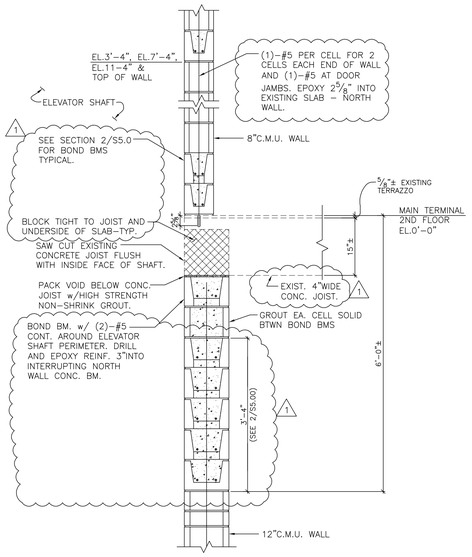

NORTH WALL OF ELEVATOR B110
EXISTING PAN JOIST BRG. 3/4" = 1'-0" 4 S5.00

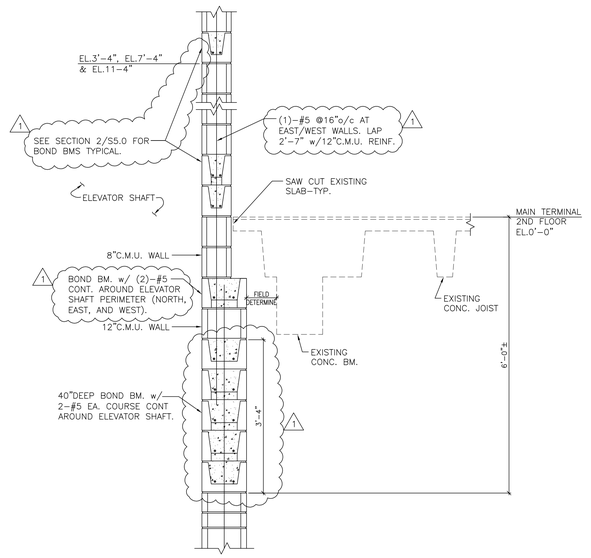

EAST/WEST WALLS OF ELEVATOR B110 5 S5.00
3/4" = 1'-0"

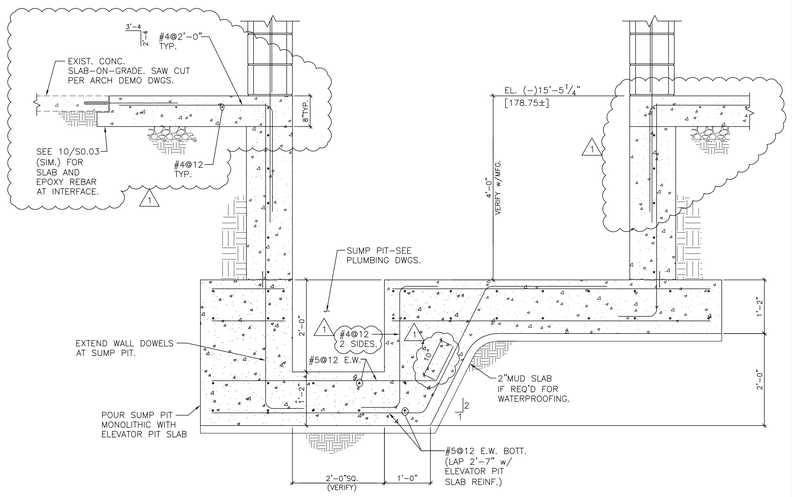

ELEVATOR PIT SECTION AT SUMP 6 S5.00
3/4" = 1'-0"

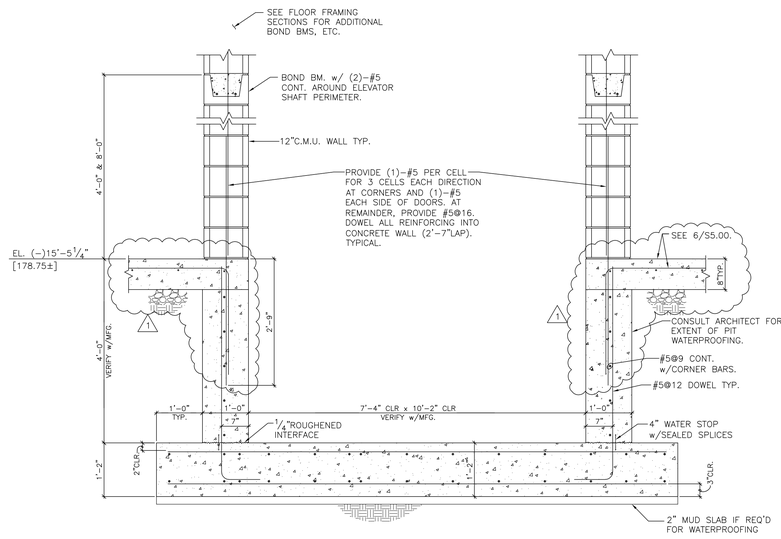

TYPICAL ELEVATOR PIT SECTION 7 S5.00
3/4" = 1'-0"

MASONRY NOTES
1. GROUT ALL MULTIPLE BOND BEAMS MONOLITHICALLY.
2. PROVIDE CORNER BARS AT ALL CONTINUOUS BOND BEAMS.
3. VERTICAL REINFORCING IS CENTERED IN WALL.
4. SEE GENERAL NOTES FOR ADDITIONAL INFO.

GORDON JOHNSON
Architecture
654 Hay Street, Suite 4
Fayetteville, NC 28301
Phone: (910) 223-2186
E-Mail: gordon@gordonjohnsonarchitecture.com

FLEMING & ASSOCIATES, PA
1004 HAY STREET
FAYETTEVILLE, NC 28305
TEL 910-433-2600
FAX 910-433-2604
www.flemingandassociates.com

NORTH CAROLINA PROFESSIONAL ENGINEER SEAL 11278 STEPHEN FLEMING 08/22/19

Fayetteville Regional Airport - Airline Terminal Improvements Part 2
400 Airport Road
Fayetteville, North Carolina 28306

MAIN TERMINAL - NEW ELEVATOR BLD
PIT PLAN, FOUNDATION AND WALL SECTIONS

DRAWN BY: SJD
REVIEWED BY: SF
DATE: 1-22-19
PROJECT NO.: 1515

REVISIONS
A 8-14-19 ADDENDUM #3
A

SHEET NUMBER
S5.00

#19-59

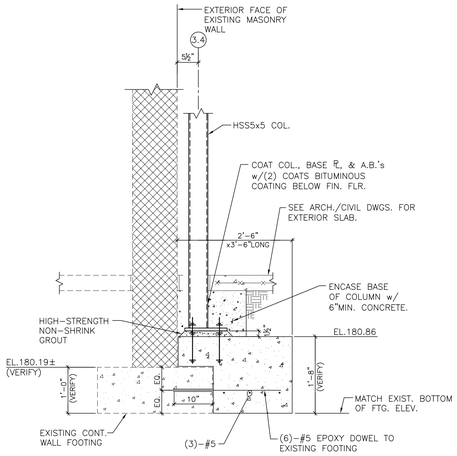

SECTION – CONCOURSE B 1
3/4" = 1'-0" S5.10

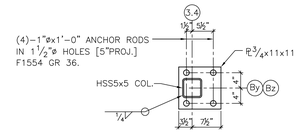

HSS5x5 BASE PLATE PLAN 2
3/4" = 1'-0" S5.10

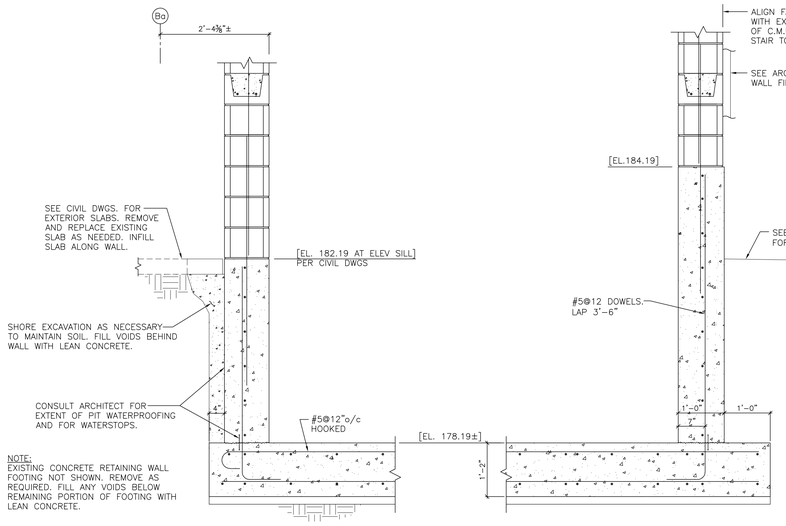

ELEVATOR D001 – PIT SECTION 4
3/4" = 1'-0" S5.10

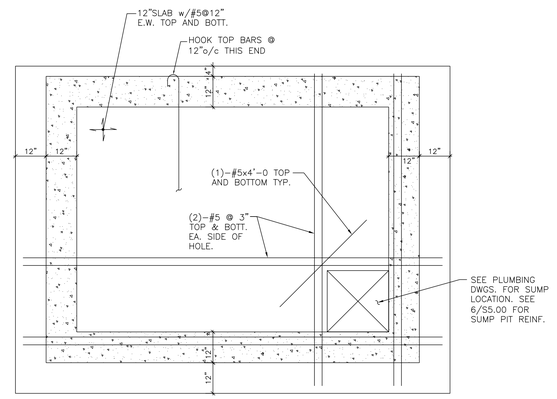

ELEVATOR D001 PIT PLAN 3
1/2" = 1'-0" S5.10

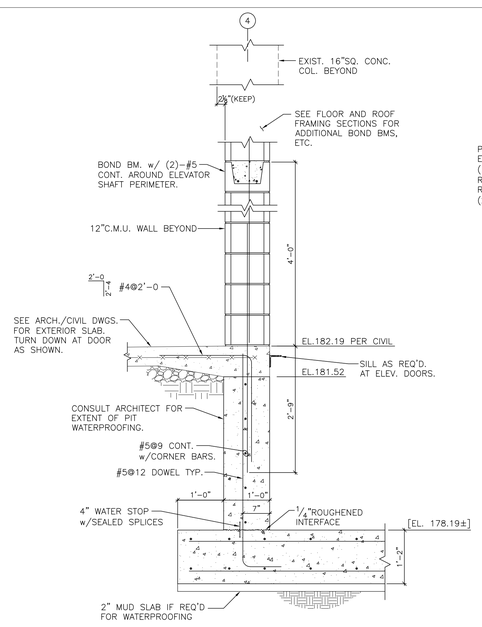

ELEVATOR D001 – PIT SECTION 5
3/4" = 1'-0" S5.10

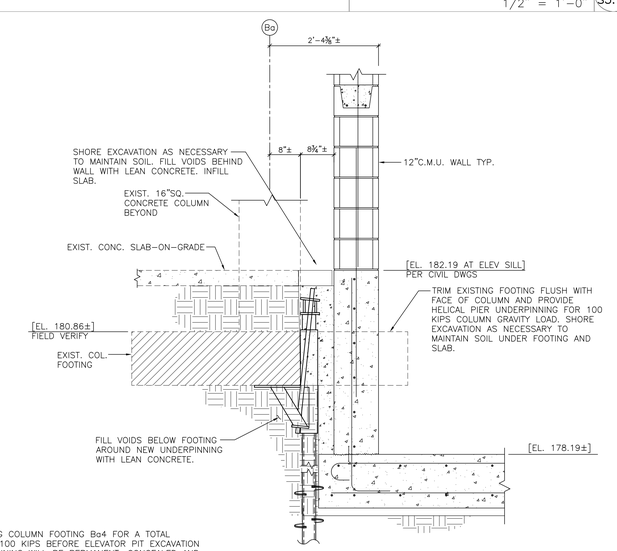

NOTE:
1. UNDERPIN EXISTING COLUMN FOOTING Bo4 FOR A TOTAL GRAVITY LOAD OF 100 KIPS BEFORE ELEVATOR PIT EXCAVATION BEGINS. UNDERPINNING WILL BE PERMANENT, CONCEALED AND LEFT IN PLACE. PROVIDE UNDERPINNING DETAILS AND CALCULATIONS PREPARED BY A REGISTERED ENGINEER FOR REVIEW BEFORE INSTALLING UNDERPINNING.

ELEVATOR D001 – PIT SECTION AT UNDERPINNING 6
3/4" = 1'-0" S5.10

GORDON JOHNSON
Architecture
654 Hay Street, Suite 4
Fayetteville, NC 28301
Phone: (910) 223-2186
E-Mail: gordon@gordonjohnsonarchitecture.com

FLEMING & ASSOCIATES, PA
1004 HAY STREET
FAYETTEVILLE, NC 28305
TEL 910-433-2600
FAX 910-433-2604
www.flemingandassociates.com

NORTH CAROLINA PROFESSIONAL SEAL 11278 ENGINEER STEPHEN FLEMING
9/22/19

Fayetteville Regional Airport - Airline Terminal Improvements Part 2
400 Airport Road
Fayetteville, North Carolina 28306

CONCOURSE B - NEW ELEVATOR D001 & FOYER ADDITION
SECTIONS

DRAWN BY: SJD
REVIEWED BY: SF
DATE: 1-22-19
PROJECT NO.: 1515

REVISIONS

SHEET NUMBER
S5.10

#19-59

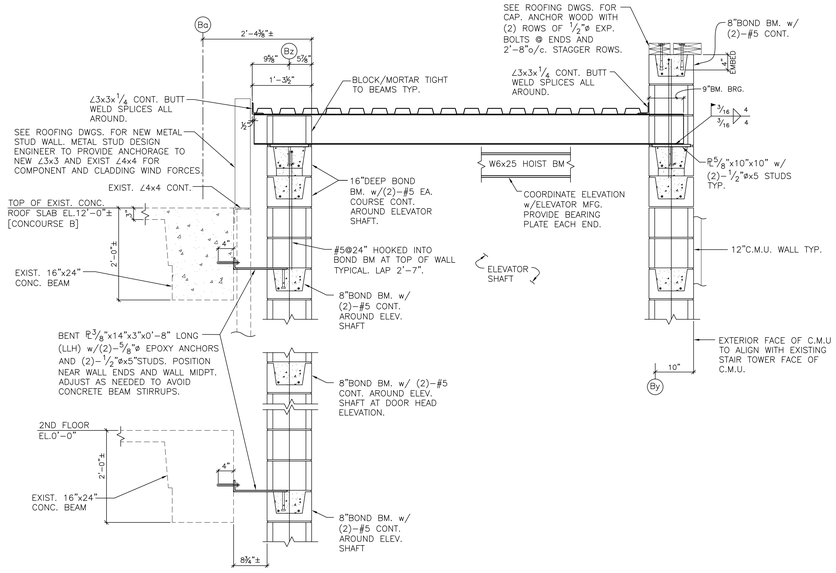

SECTION – CONCOURSE B 1 S5.11
3/4" = 1'-0"

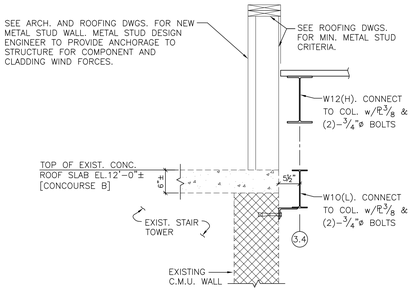

SECTION – CONCOURSE B 2 S5.11
3/4" = 1'-0"

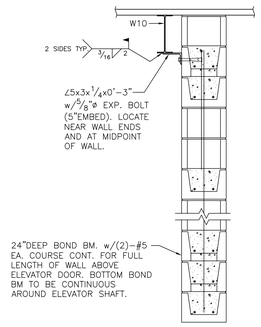

SECTION – CONCOURSE B 3 S5.11
3/4" = 1'-0"

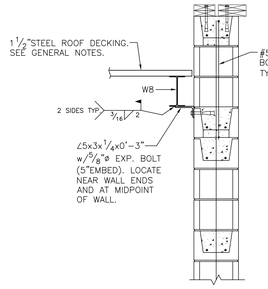

SECTION – CONCOURSE B 4 S5.11
3/4" = 1'-0"

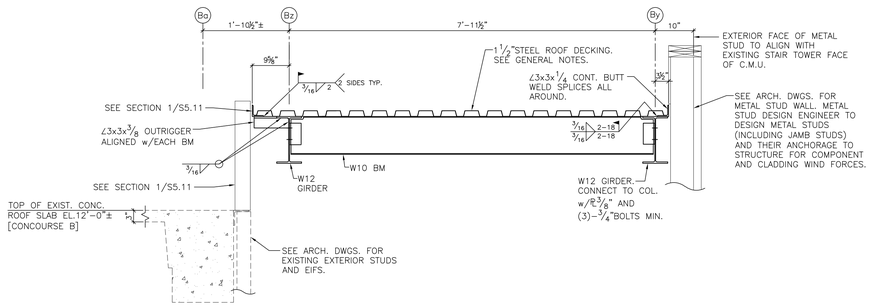

SECTION – CONCOURSE B 5 S5.11
3/4" = 1'-0"

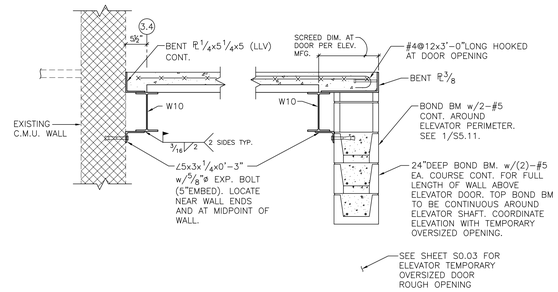

SECTION – CONCOURSE B 6 S5.11
3/4" = 1'-0"

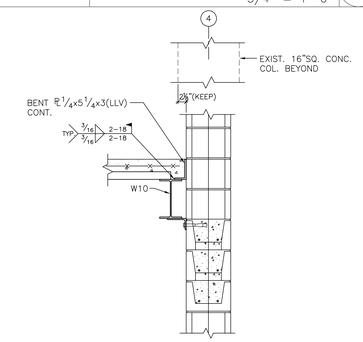

SECTION – CONCOURSE B 7 S5.11
3/4" = 1'-0"

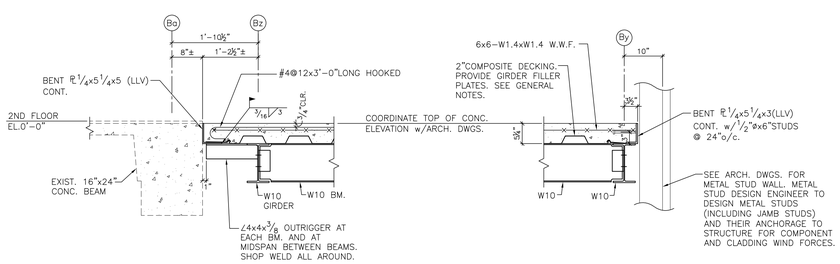

SECTION – CONCOURSE B 8 S5.11
3/4" = 1'-0"

MASONRY NOTES
1. GROUT ALL MULTIPLE BOND BEAMS MONOLITHICALLY.
2. PROVIDE CORNER BARS AT ALL CONTINUOUS BOND BEAMS.
3. VERTICAL REINFORCING IS CENTERED IN WALL.
4. GROUT TIGHT TO UNDERSIDE OF BEARING PLATES – NO VOIDS PERMITTED.
5. SEE GENERAL NOTES FOR ADDITIONAL INFO.

GORDON JOHNSON
Architecture
654 Hay Street, Suite 4
Fayetteville, NC 28301
Phone: (910) 223-2186
E-Mail: gordon@gordonjohnsonarchitecture.com

FLEMING & ASSOCIATES, PA
1004 HAY STREET
FAYETTEVILLE, NC 28305
TELEPHONE 910-433-2600
FAX 910-433-2604
www.flemingandassociates.com

NORTH CAROLINA PROFESSIONAL ENGINEER SEAL 11278 STEPHEN FLEMING 10/22/19

Fayetteville Regional Airport - Airline Terminal Improvements Part 2
400 Airport Road
Fayetteville, North Carolina 28306

CONCOURSE B - NEW ELEVATOR DOOR & FOYER ADDITION
SECTIONS

DRAWN BY: SJD
REVIEWED BY: SF
DATE: 7-22-19
PROJECT NO.: 1515

REVISIONS

SHEET NUMBER
S5.11

#19-59

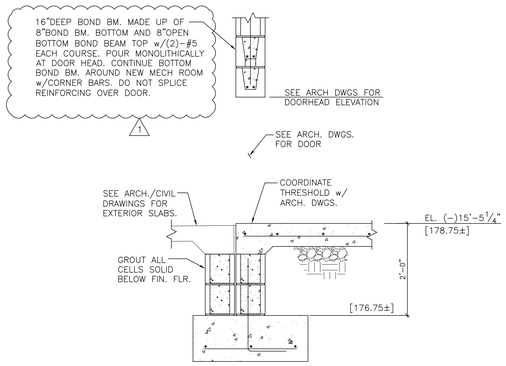

MECH. A129 – TICKETING 1
3/4" = 1'-0" S6.00

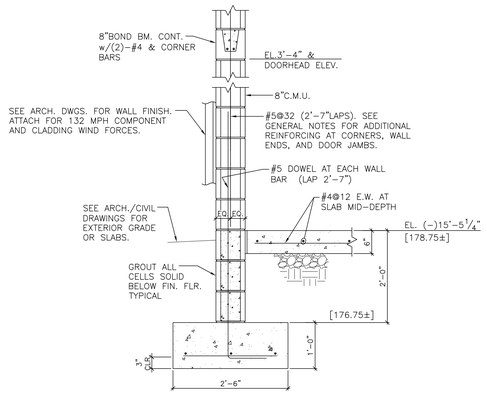

MECH. A129 – TICKETING 2
3/4" = 1'-0" S6.00

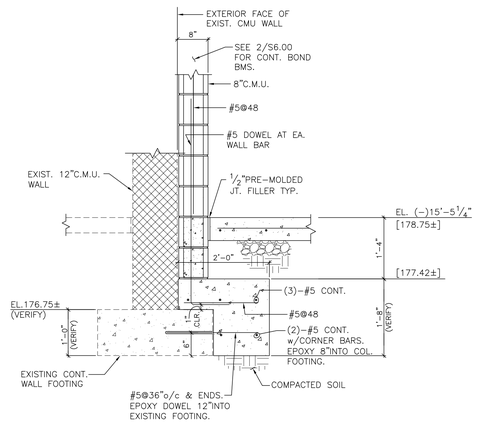

MECH. A129 – TICKETING 3
3/4" = 1'-0" S6.00

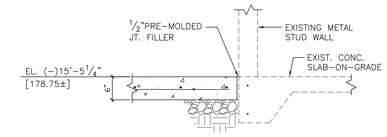

MECH. A129 – TICKETING 4
3/4" = 1'-0" S6.00

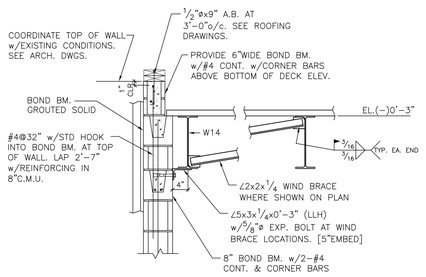

MECH. A129 – TICKETING 5
3/4" = 1'-0" S6.00

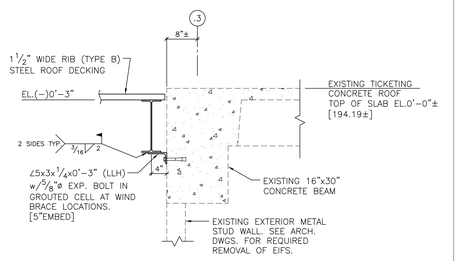

MECH. A129 – TICKETING 6
3/4" = 1'-0" S6.00

NOTE:
SEE 5/S6.00 FOR INFO NOT SHOWN.

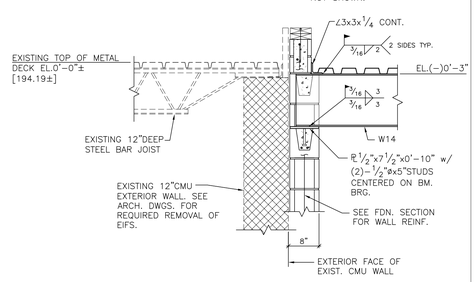

MECH. A129 – TICKETING 7
3/4" = 1'-0" S6.00

NOTE:
SEE 5/S6.00 FOR INFO NOT SHOWN.

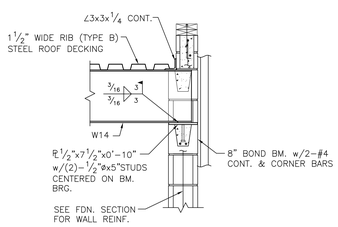

MECH. A129 – TICKETING 8
3/4" = 1'-0" S6.00

GORDON JOHNSON
Architecture
654 Hay Street, Suite 4
Fayetteville, NC 28301
Phone: (910) 223-2186
E-Mail: gordon@gordonjohnsonarchitecture.com

FLEMING & ASSOCIATES, PA
1004 HAY STREET
FAYETTEVILLE, NC 28305
(910) 483-5500
FAX 910-433-2604
www.flemingandassociates.com

NORTH CAROLINA PROFESSIONAL ENGINEER SEAL 11278 STEPHEN FLEMING
9/22/19

Fayetteville Regional Airport - Airline Terminal Improvements Part 2

400 Airport Road
Fayetteville, North Carolina 28306

TICKETING - MECH. A129 ADDITION
SECTIONS

DRAWN BY: SJD
REVIEWED BY: SF
DATE: 7-22-19
PROJECT NO.: 1515

REVISIONS

1	8-14-19 ADDENDUM #3
2	
3	

SHEET NUMBER
S6.00

#19-59

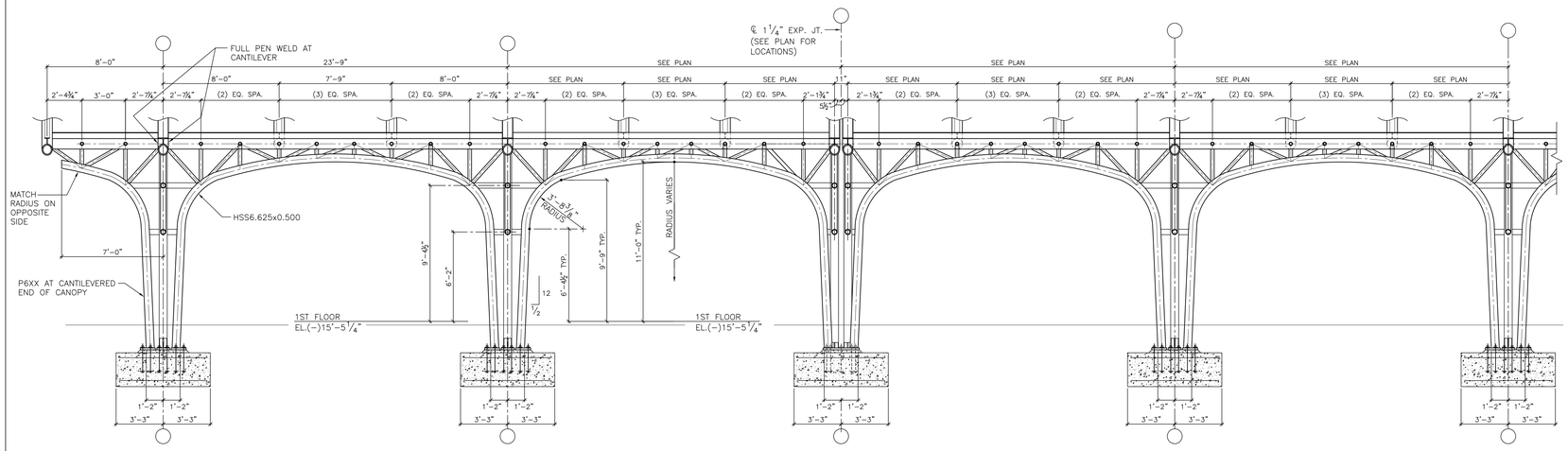

1. ALL SPLICES IN MEMBERS ARE TO DEVELOP THE FULL CAPACITY OF THE MEMBER (FULL PENETRATION WELDS WITH BACKER BARS). SUBMIT SPLICE LOCATIONS FOR REVIEW PRIOR TO FABRICATION.
2. STEEL IS "ARCHITECTURALLY EXPOSED." GRIND ALL EXPOSED WELDS SMOOTH FOR ARCH. FINISH.
3. PROVIDE 1/4"THICK END PLATES TYPICAL AT EXPOSED ENDS AND SEAL WELD.

FRAMING ELEVATION ALONG K – FRONT CANOPY (1)
1/4" = 1'-0" S7.00

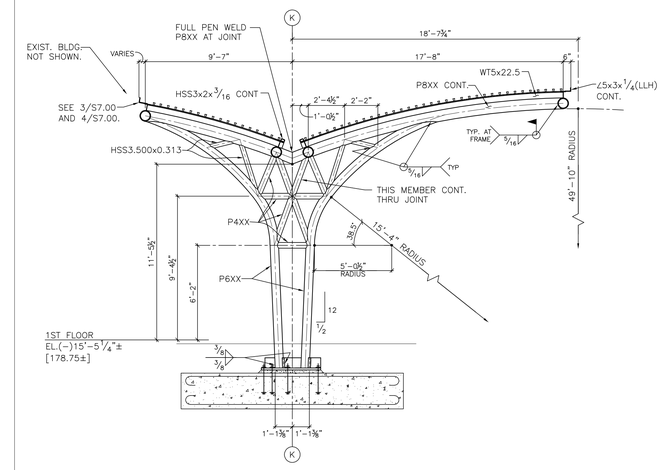

FRAMING ELEVATION – FRONT CANOPY (2)
1/4" = 1'-0" S7.00

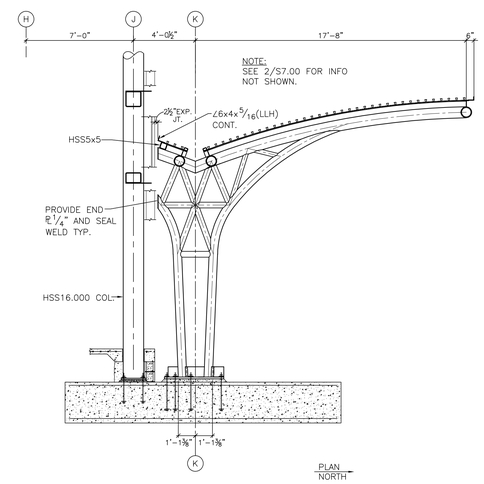

FRAMING ELEVATION – FRONT CANOPY (3)
1/4" = 1'-0" S7.00

GORDON JOHNSON
Architecture
654 Hay Street, Suite 4
Fayetteville, NC 28301
Phone: (910) 223-2186
E-Mail: gordon@gordonjohnsonarchitecture.com

FLEMING & ASSOCIATES, PA
1004 HAY STREET
FAYETTEVILLE, NC 28305
(910) 433-2600
FAX 910-433-2604
www.flemingandassociates.com

NORTH CAROLINA PROFESSIONAL ENGINEER SEAL 11278 STEPHEN FLEMING 09/22/19

Fayetteville Regional Airport - Airline Terminal Improvements Part 2

400 Airport Road
Fayetteville, North Carolina 28306

FRONT CANOPY ELEVATIONS

DRAWN BY: SJD
REVIEWED BY: SF
DATE: 7-22-19
PROJECT NO.: 1515

REVISIONS

SHEET NUMBER
S7.00

#19-59

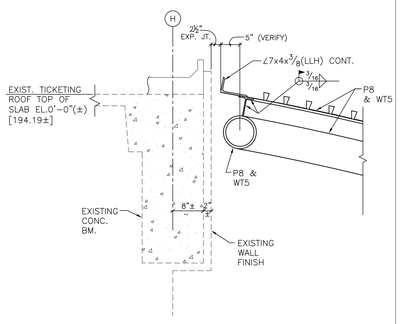

CANOPY SECTION ALONG TICKETING 1 S7.01
3/4" = 1'-0"

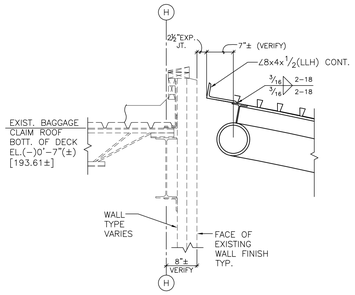

CANOPY SECTION ALONG BAGGAGE CLAIM 2 S7.01
3/4" = 1'-0"

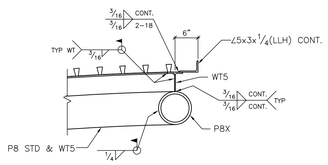

SECTION – FRONT CANOPY 3 S7.01
3/4" = 1'-0"

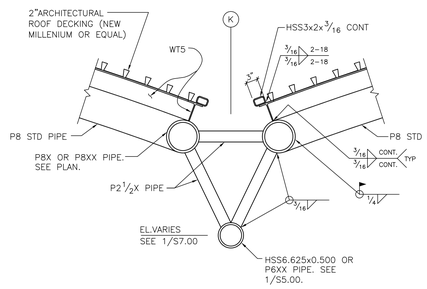

SECTION – FRONT CANOPY 4 S7.01
3/4" = 1'-0"

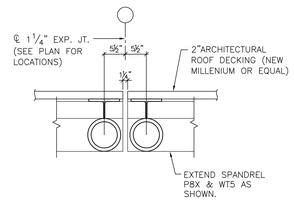

SECTION @ EXP. JT. FRONT CANOPY 5 S7.01
3/4" = 1'-0"

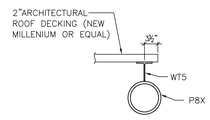

SECTION – FRONT CANOPY 6 S7.01
3/4" = 1'-0"

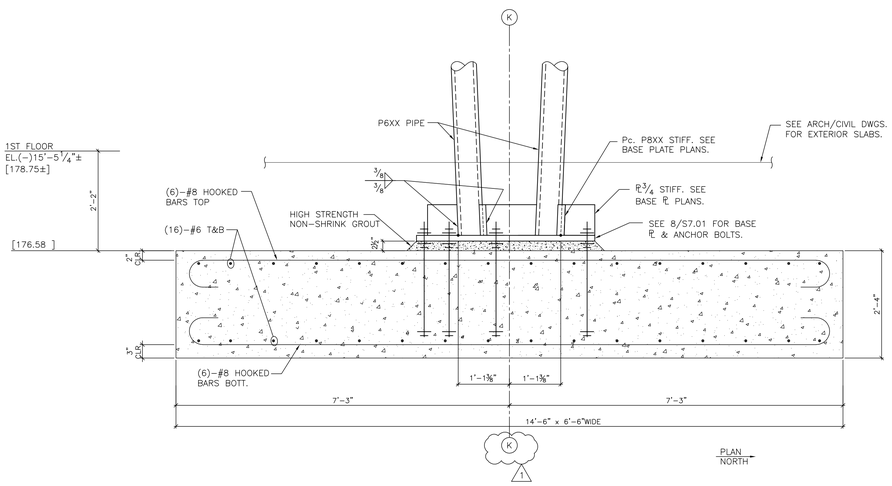

SECTION – FRONT CANOPY U.N.O. 7 S7.01
3/4" = 1'-0"

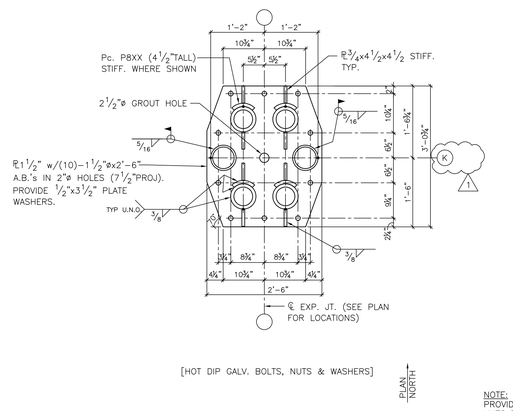

[HOT DIP GALV. BOLTS, NUTS & WASHERS]

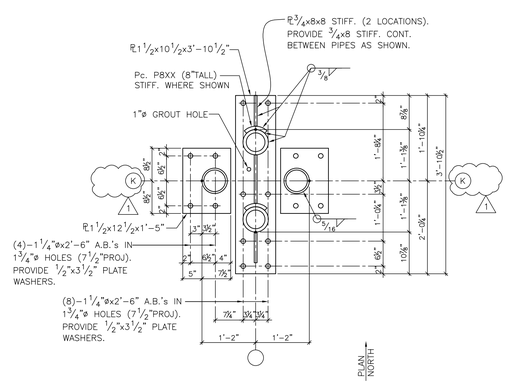

[HOT DIP GALV. BOLTS, NUTS & WASHERS]

NOTE:
PROVIDE LEVELING NUTS TYPICAL.

BASE PLATE DETAILS – FRONT CANOPY 8 S7.01
3/4" = 1'-0"

GORDON JOHNSON
Architecture
654 Hay Street, Suite 4
Fayetteville, NC 28301
Phone: (910) 223-2186
E-Mail: gordon@gordonjohnsonarchitecture.com

FLEMING & ASSOCIATES, PA
1004 HAY STREET
FAYETTEVILLE, NC 28305
TEL 910-433-2000
FAX 910-433-2004
www.flemingandassociates.com

NORTH CAROLINA PROFESSIONAL ENGINEER SEAL 11278 STEPHEN FLEMING
10/22/19

Fayetteville Regional Airport - Airline Terminal Improvements Part 2

400 Airport Road
Fayetteville, North Carolina 28306

FRONT CANOPY SECTIONS

DRAWN BY: SJD
REVIEWED BY: SF
DATE: 7-22-19
PROJECT NO.: 1515

REVISIONS
1 8-14-19 ADDENDUM #3
2

SHEET NUMBER
S7.01

#19-59

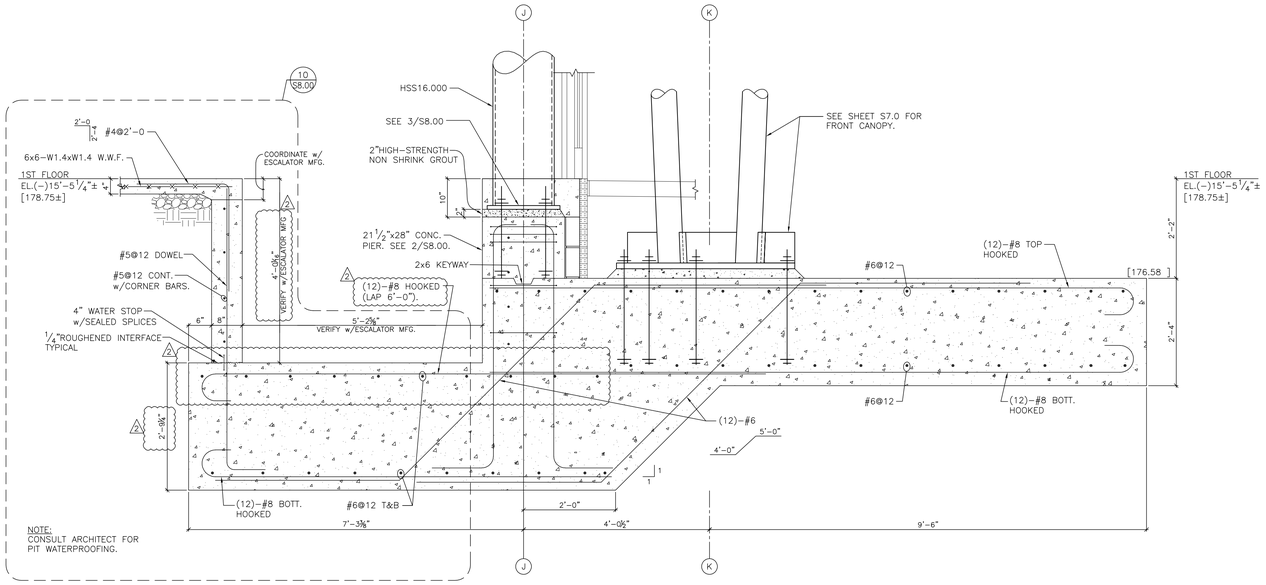

ESCALATOR PIT SECTION AT J3 & J10 – MAIN TERMINAL 1 S8.00
3/4" = 1'-0"

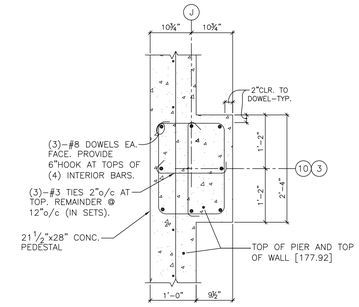

CONC. PIER PLAN AT J3 & J10 2 S8.00
3/4" = 1'-0"

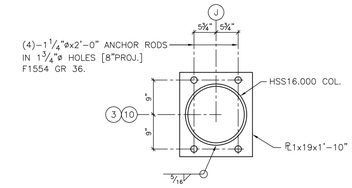

BASE PLATE PLAN AT J3 & J10 3 S8.00
3/4" = 1'-0"

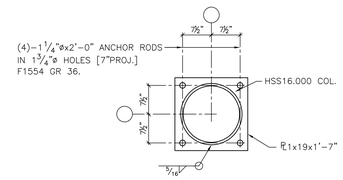

HSS16.000 BASE PLATE PLAN U.N.O. 4 S8.00
3/4" = 1'-0"

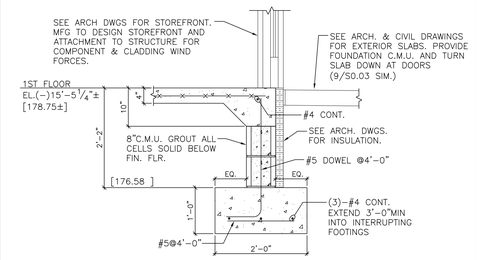

SECTION 5 S8.00
3/4" = 1'-0"

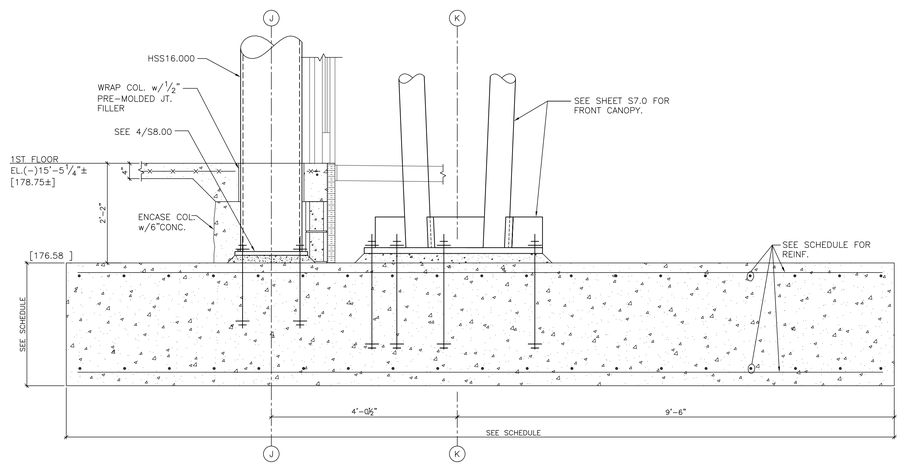

FOUNDATION SECTION – MAIN TERMINAL 6 S8.00
3/4" = 1'-0"

NOTE:
SEE 1/S8.00 FOR INFO NOT SHOWN.

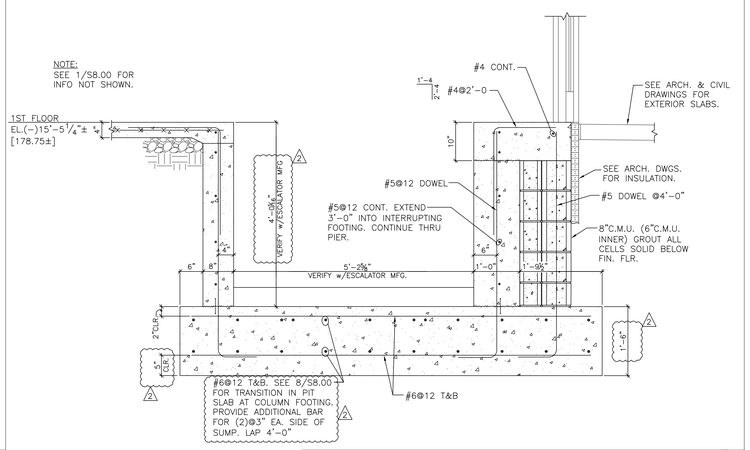

ESCALATOR PIT SECTION – MAIN TERMINAL 7 S8.00
3/4" = 1'-0"

DELETE SECTION (COMBINED WITH 8/S.00)

ESCALATOR PIT SLAB TRANSITION AT COLUMN FOOTING 11 S8.00
3/4" = 1'-0"

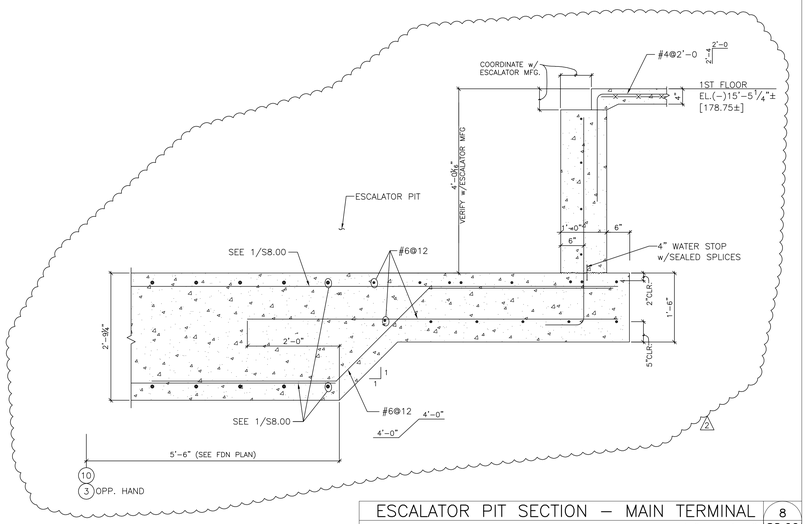

ESCALATOR PIT SECTION – MAIN TERMINAL 8 S8.00
3/4" = 1'-0"

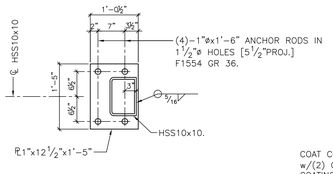

BASE PL PLAN

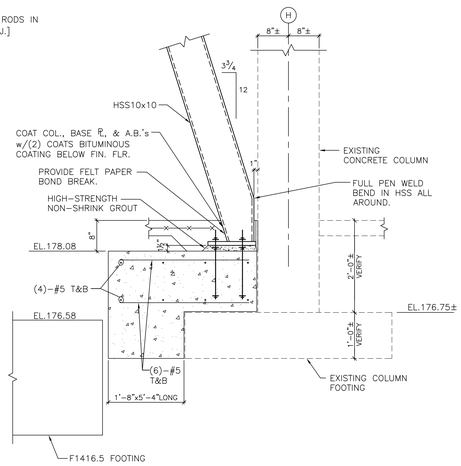

FOUNDATION SECTION – MAIN TERMINAL 9 S8.00
3/4" = 1'-0"

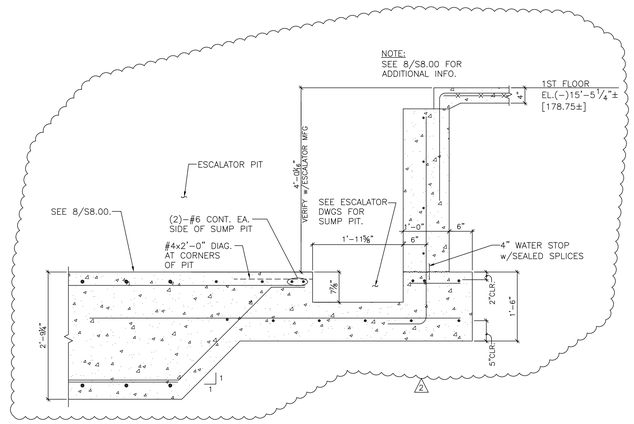

SUMP PIT AT ESCALATOR 10 S8.00
3/4" = 1'-0"

GORDON JOHNSON Architecture
654 Hay Street, Suite 4
Fayetteville, NC 28301
Phone: (910) 223-2186
E-Mail: gordon@gordonjohnsonarchitecture.com

FLEMING & ASSOCIATES, PA
1004 HAY STREET
FAYETTEVILLE, NC 28305
(910) 433-2600
FAX 910-433-2604
www.flemingandassociates.com

NORTH CAROLINA PROFESSIONAL ENGINEER SEAL 11278 STEPHEN FLEMING 8/16/20

Fayetteville Regional Airport - Airline Terminal Improvements Part 2

400 Airport Road
Fayetteville, North Carolina 28306

MAIN TERMINAL
FOUNDATION SECTIONS

DRAWN BY: SJD
REVIEWED BY: SF
DATE: 7-22-19
PROJECT NO.: 1515

REVISIONS
1 8-14-19 ADDENDUM #3
2 7-16-20 ESCALATOR REV
3

SHEET NUMBER
S8.00

#19-59

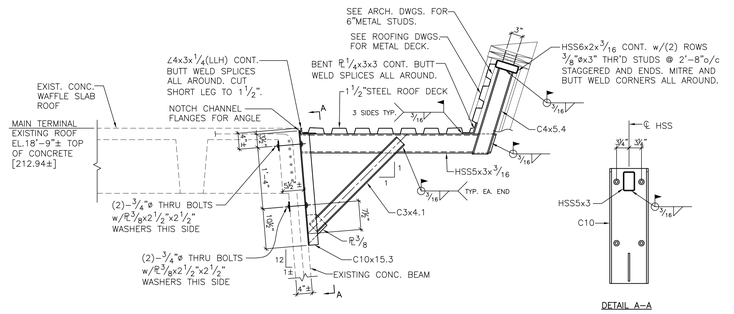

NOTE:
SEE ARCH DWGS FOR EXISTING PRECAST AT ROOF PERIMETER (NOT SHOWN) TO BE REMOVED.

ROOF SECTION – MAIN TERMINAL 1 S8.11
3/4" = 1'-0"

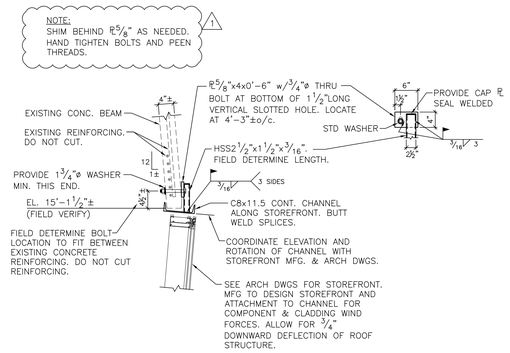

SECTION – MAIN TERMINAL 2 S8.11
3/4" = 1'-0"

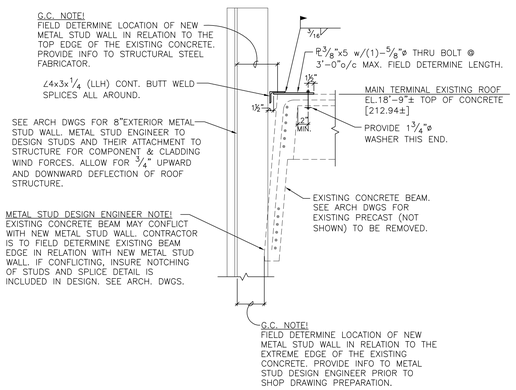

SECTION – MAIN TERMINAL 3 S8.11
3/4" = 1'-0"

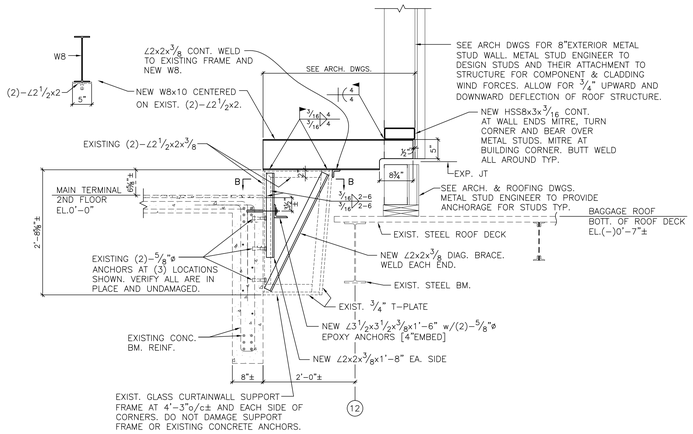

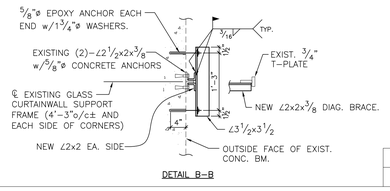

SECTION – MAIN TERMINAL 4 S8.11
3/4" = 1'-0"

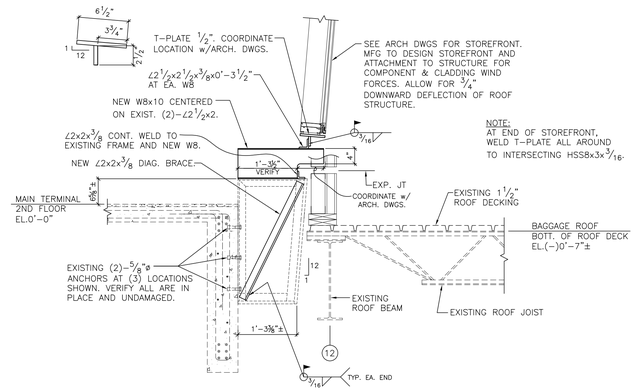

SECTION – MAIN TERMINAL 5 S8.11
3/4" = 1'-0"

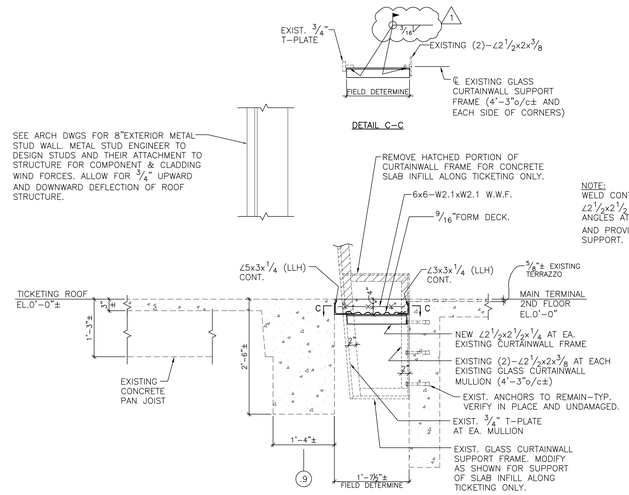

SECTION ALONG TICKETING – MAIN TERMINAL 6 S8.11
3/4" = 1'-0"

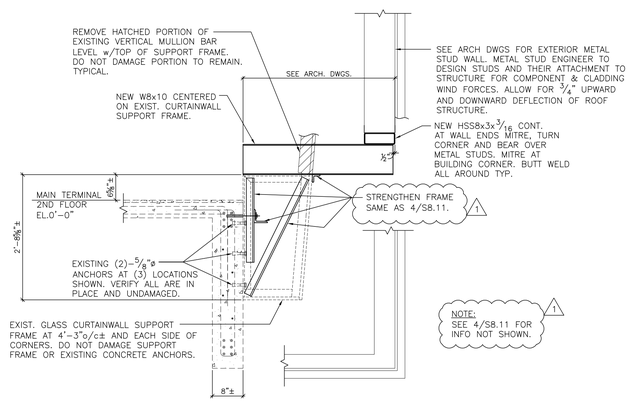

SECTION – MAIN TERMINAL 7 S8.11
3/4" = 1'-0"

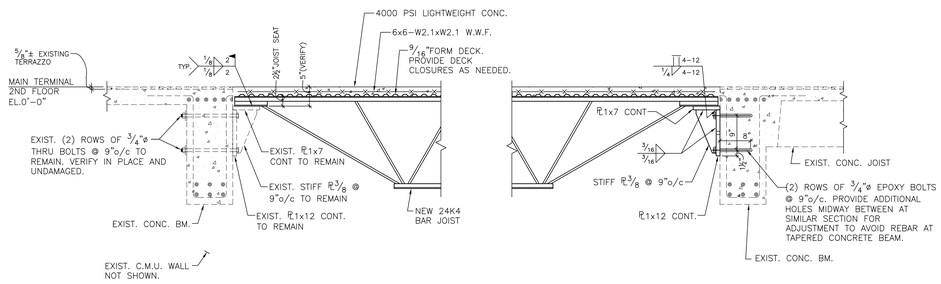

SECTION AT EXISTING ESCALATOR INFILL – MAIN TERMINAL 8 S8.11
3/4" = 1'-0"

GORDON JOHNSON
Architecture
654 Hay Street, Suite 4
Fayetteville, NC 28301
Phone: (910) 223-2166
E-Mail: gordon@gordonjohnsonarchitecture.com

FLEMING & ASSOCIATES, PA
1004 HAY STREET
FAYETTEVILLE, NC 28305
PHONE 910-433-2600
FAX 910-433-2604
www.flemingandassociates.com

NORTH CAROLINA PROFESSIONAL ENGINEER SEAL 11278 STEPHEN FLEMING
7/22/19

Fayetteville Regional Airport - Airline Terminal Improvements Part 2

400 Airport Road
Fayetteville, North Carolina 28306

MAIN TERMINAL SECTIONS

DRAWN BY: SJD
REVIEWED BY: SF
DATE: 7-22-19
PROJECT NO.: 1515

REVISIONS
1 8-14-19 ADDENDUM #3
2
3

SHEET NUMBER
S8.11

#19-59

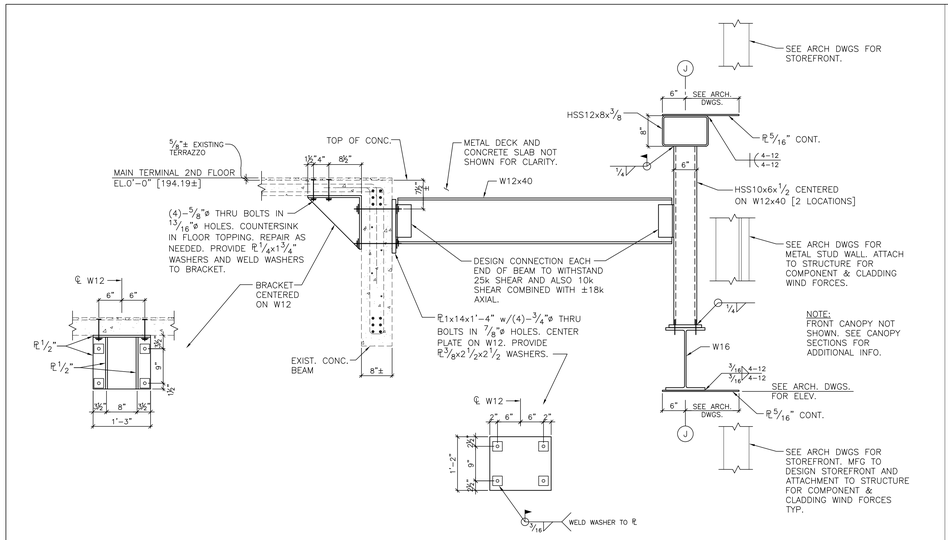

FLOOR FRAMING SECTION – MAIN TERMINAL 1 S8.12
3/4" = 1'-0"

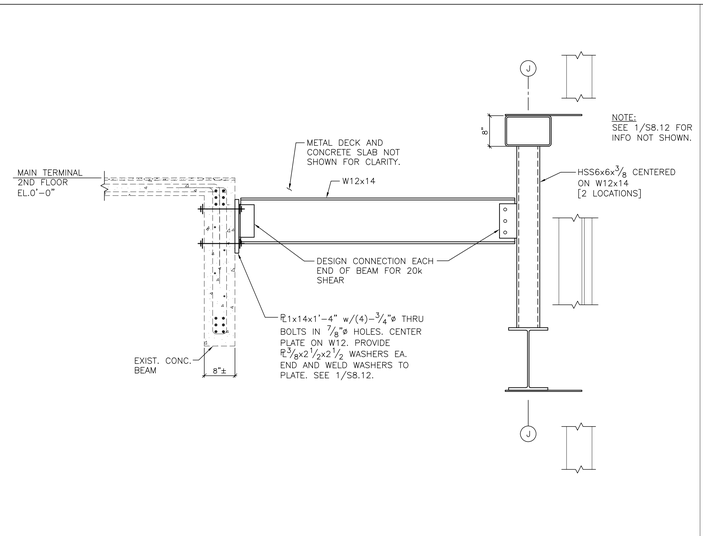

FLOOR FRAMING SECTION – MAIN TERMINAL 2 S8.12
3/4" = 1'-0"

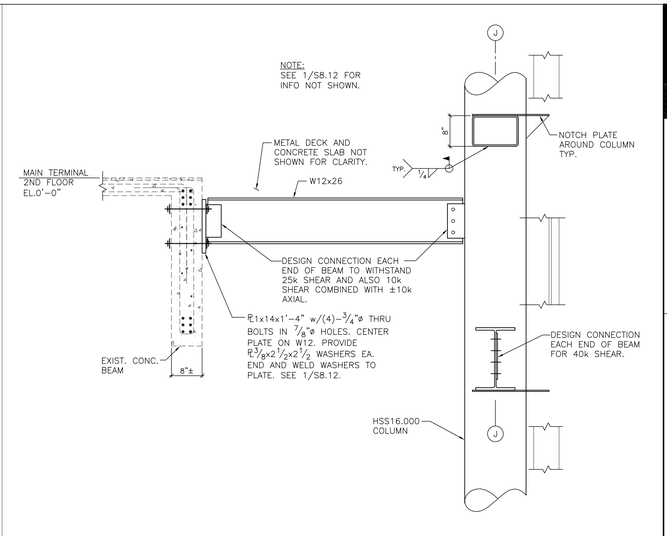

FLOOR FRAMING SECTION – MAIN TERMINAL 3 S8.12
3/4" = 1'-0"

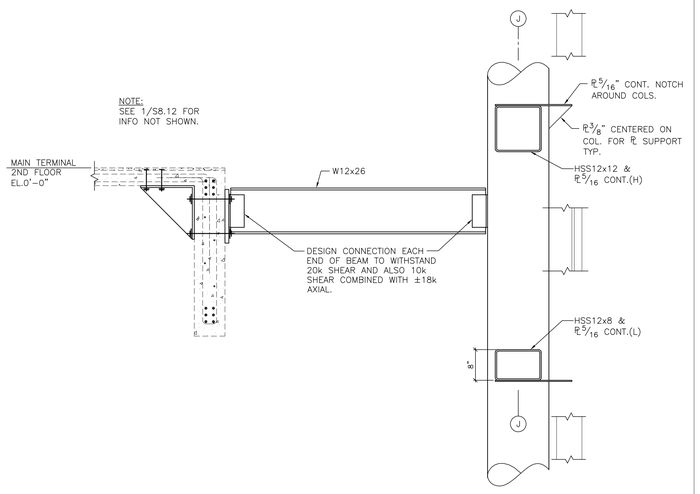

FLOOR FRAMING SECTION – MAIN TERMINAL 4 S8.12
3/4" = 1'-0"

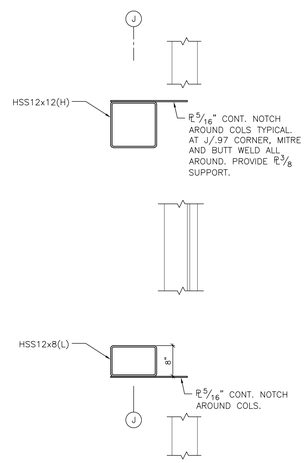

SECTION – MAIN TERMINAL 5 S8.12
3/4" = 1'-0"

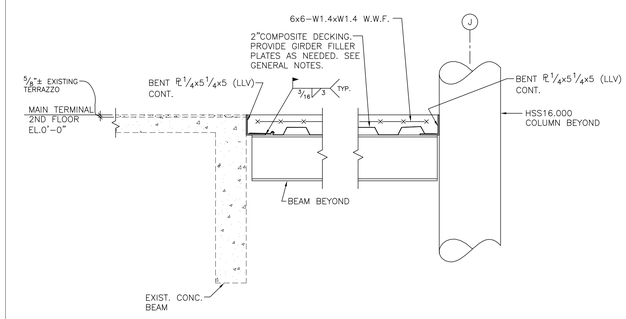

FLOOR SECTION – MAIN TERMINAL 6 S8.12
3/4" = 1'-0"

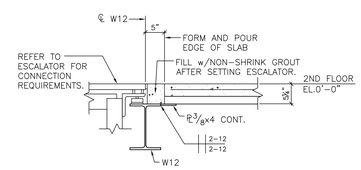

ESCALATOR LANDING – MAIN TERMINAL 7 S8.12
3/4" = 1'-0"

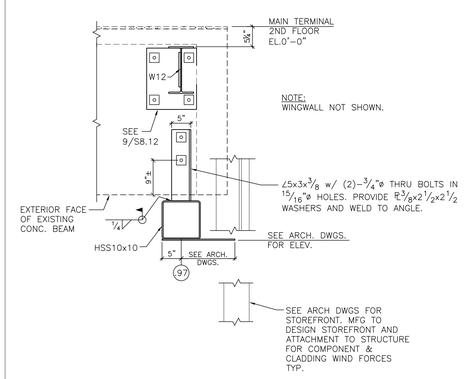

SECTION – MAIN TERMINAL 10 S8.12
3/4" = 1'-0"

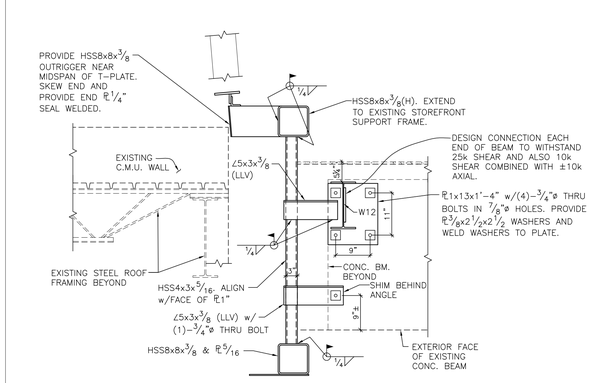

SECTION – MAIN TERMINAL 9 S8.12
3/4" = 1'-0"

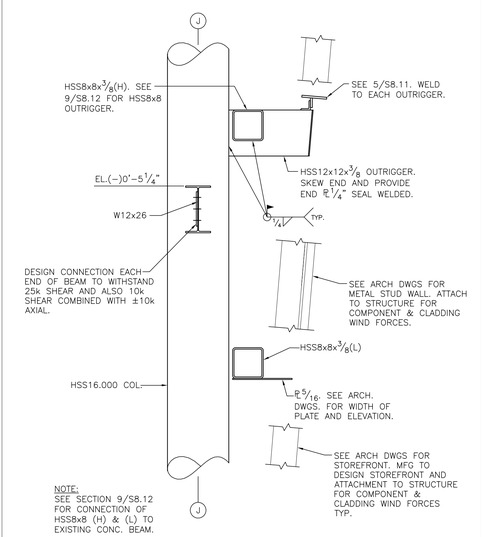

SECTION – MAIN TERMINAL 8 S8.12
3/4" = 1'-0"

GORDON JOHNSON Architecture
654 Hay Street, Suite 4
Fayetteville, NC 28301
Phone: (910) 223-2186
E-Mail: gordon@gordonjohnsonarchitecture.com

FLEMING & ASSOCIATES, PA
1004 HAY STREET
FAYETTEVILLE, NC 28305
(910) 433-2600
FAX 910-433-2604
www.flemingandassociates.com

NORTH CAROLINA PROFESSIONAL ENGINEER SEAL 11278 STEPHEN FLEMING
09/22/19

Fayetteville Regional Airport - Airline Terminal Improvements Part 2

400 Airport Road
Fayetteville, North Carolina 28306

MAIN TERMINAL SECTIONS

DRAWN BY: SJD
REVIEWED BY: SF
DATE: 7-22-19
PROJECT NO.: 15/5

REVISIONS

SHEET NUMBER
S8.12

#19-59

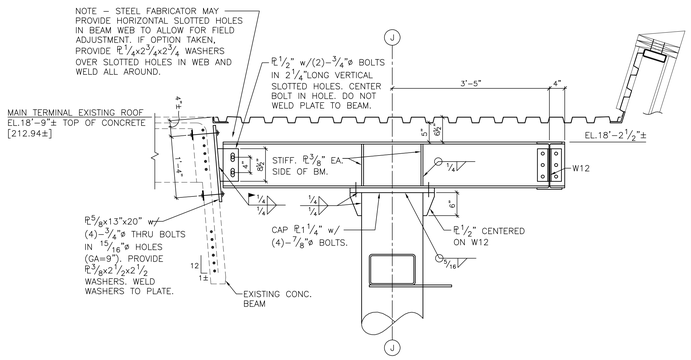

ROOF FRAMING SECTION – MAIN TERMINAL 1 S8.13
3/4" = 1'–0"

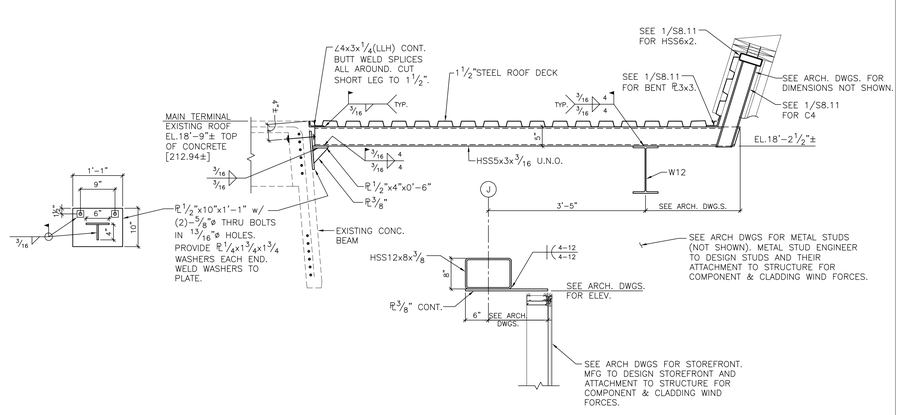

ROOF FRAMING SECTION – MAIN TERMINAL 2 S8.13
3/4" = 1'–0"

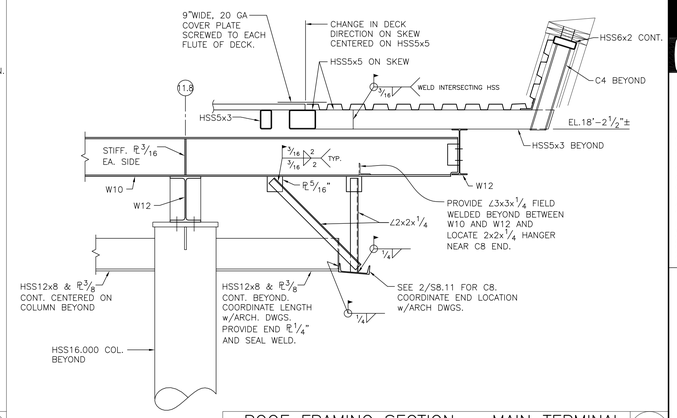

ROOF FRAMING SECTION – MAIN TERMINAL 3 S8.13
3/4" = 1'–0"

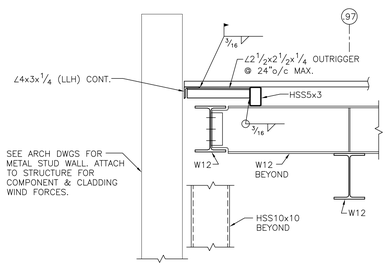

ROOF FRAMING SECTION – MAIN TERMINAL 8 S8.13
3/4" = 1'–0"

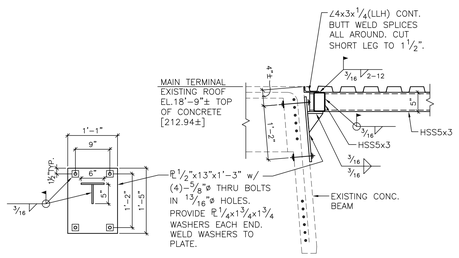

ROOF FRAMING SECTION – MAIN TERMINAL 4 S8.13
3/4" = 1'–0"

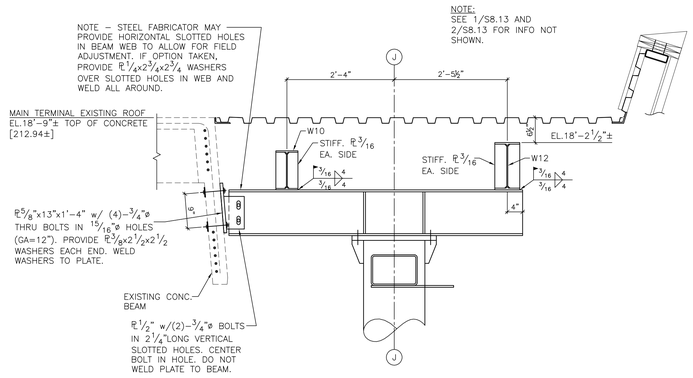

ROOF FRAMING SECTION – MAIN TERMINAL 5 S8.13
3/4" = 1'–0"

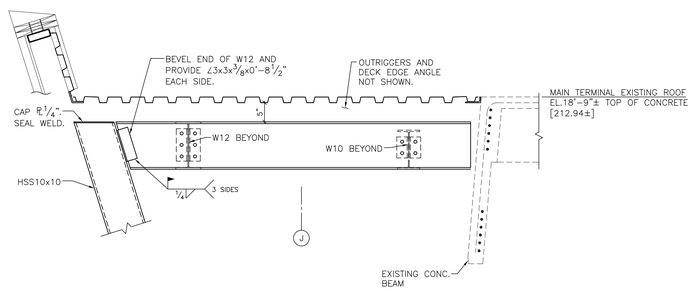

SECTION – MAIN TERMINAL 9 S8.13
3/4" = 1'–0"

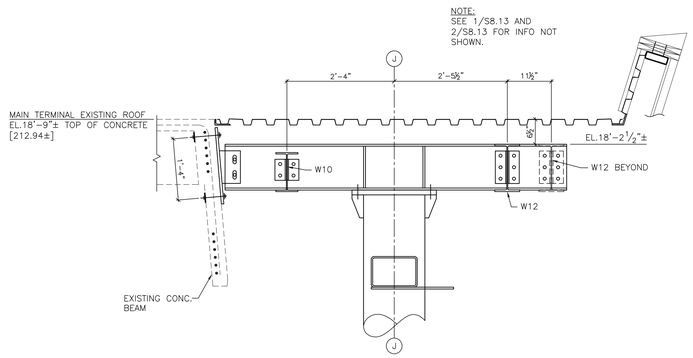

ROOF FRAMING SECTION – MAIN TERMINAL 6 S8.13
3/4" = 1'–0"

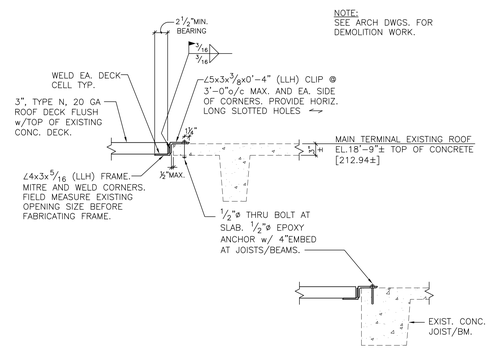

TYPICAL ROOF OPENING INFILL SECTION – MAIN TERMINAL 10 S8.13
3/4" = 1'–0"

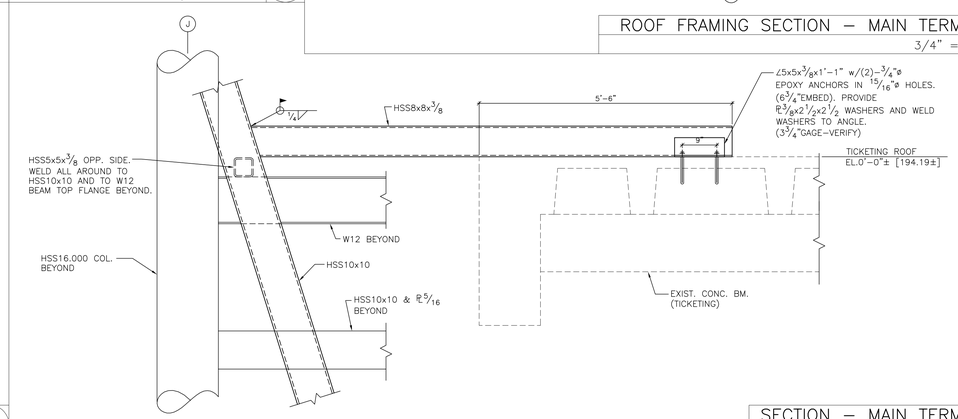

SECTION – MAIN TERMINAL 7 S8.13
3/4" = 1'–0"

GORDON JOHNSON
Architecture
654 Hay Street, Suite 4
Fayetteville, NC 28301
Phone: (910) 223-2186
E-Mail: gordon@gordonjohnsonarchitecture.com

FLEMING & ASSOCIATES, PA
1004 HAY STREET
FAYETTEVILLE, NC 28305
T 910-433-2600
F 910-433-2604
www.flemingandassociates.com

NORTH CAROLINA PROFESSIONAL ENGINEER SEAL 11278 STEPHEN FLEMING 09/22/19

Fayetteville Regional Airport - Airline Terminal Improvements Part 2

400 Airport Road
Fayetteville, North Carolina 28306

MAIN TERMINAL SECTIONS

DRAWN BY: SJD
REVIEWED BY: SF
DATE: 7-22-19
PROJECT NO.: 1515

REVISIONS

SHEET NUMBER
S8.13

#19–59

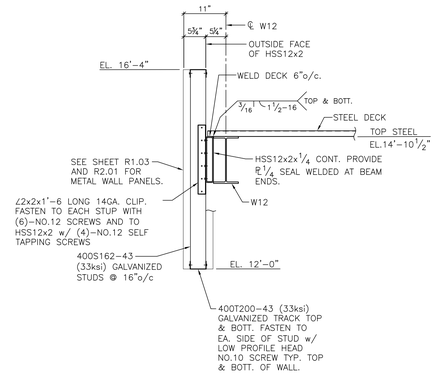

TUG CANOPY 1 S9.00
3/4" = 1'-0"

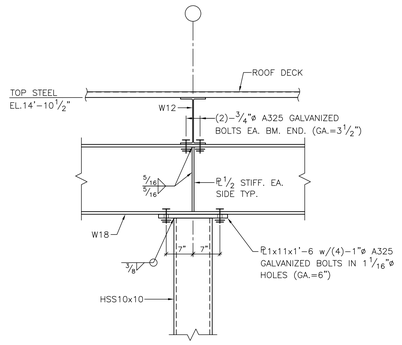

TUG CANOPY 2 S9.00
3/4" = 1'-0"

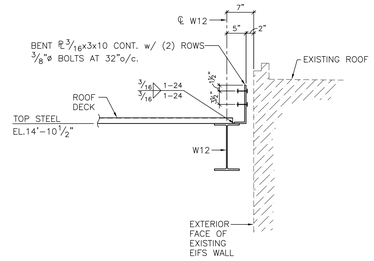

TUG CANOPY AT EXISTING BUILDING 3 S9.00
3/4" = 1'-0"

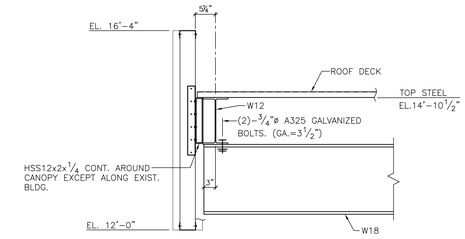

NOTE:
SEE 1/S9.00 FOR INFO. NOT SHOWN.

TUG CANOPY 4 S9.00
3/4" = 1'-0"

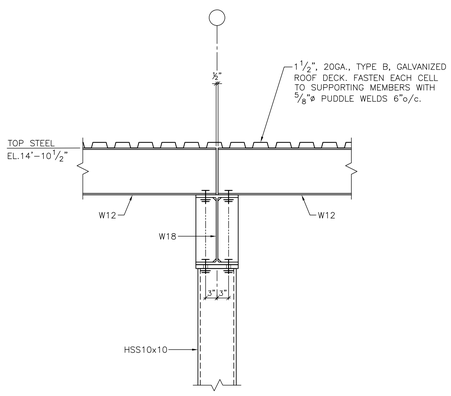

TUG CANOPY 5 S9.00
3/4" = 1'-0"

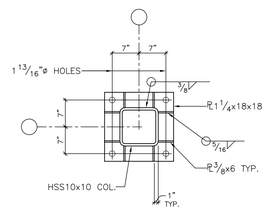

NOTE:
SEE 6A/S9.00 FOR DIAMOND BLOCKOUT AND C.J. DETAIL.

TUG CANOPY – BASE PLATE PLAN 6 S9.00
3/4" = 1'-0"

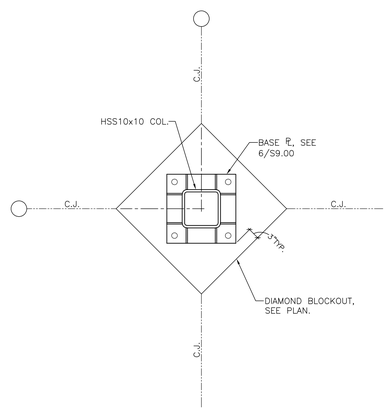

TUG CANOPY – ENLARGED DIAMOND BLOCKOUT AND C.J. PLAN 3/4" = 1'-0" 6A S9.00

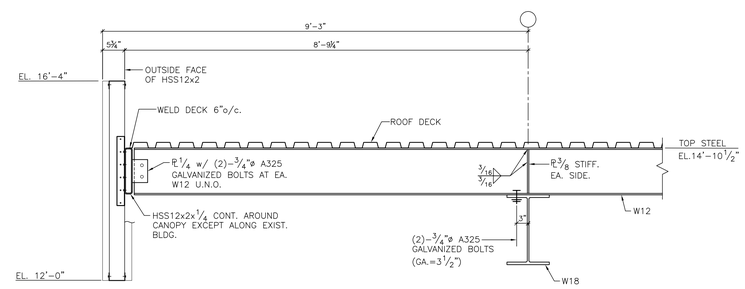

TUG CANOPY 7 S9.00
3/4" = 1'-0"

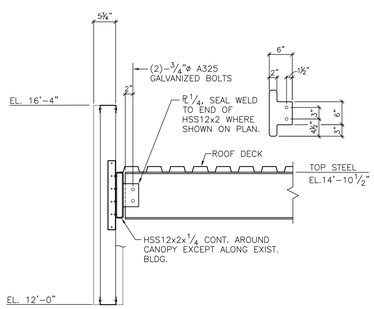

NOTE:
SEE 1/S9.00 FOR INFO. NOT SHOWN.

TUG CANOPY 8 S9.00
3/4" = 1'-0"

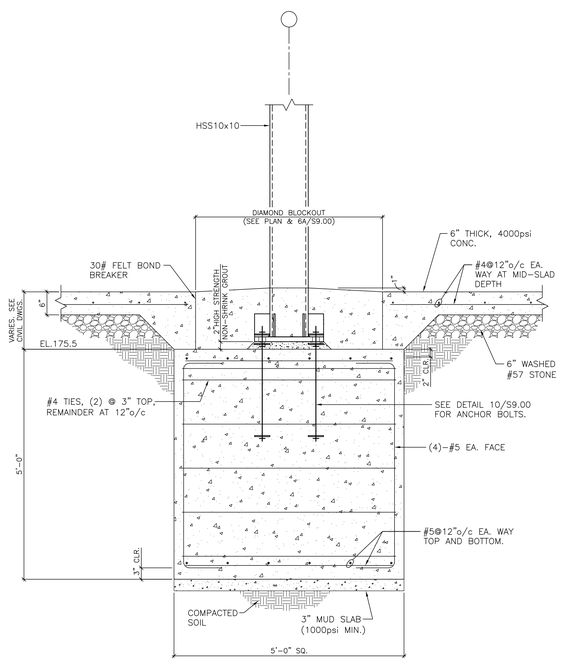

TUG CANOPY 9 S9.00
3/4" = 1'-0"

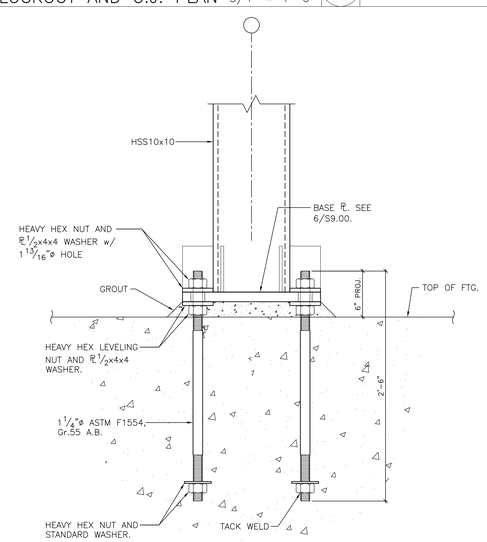

TYP. TUG CANOPY ANCHOR BOLT DETAIL 10 S9.00
1 1/2" = 1'-0"

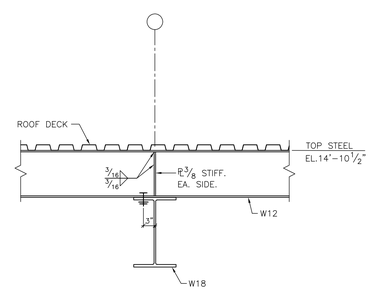

SECTION 11 S9.00
3/4" = 1'-0"

GORDON JOHNSON
Architecture
654 Hay Street, Suite 4
Fayetteville, NC 28301
Phone: (910) 223-2186
E-Mail: gordon@gordonjohnsonarchitecture.com

FLEMING & ASSOCIATES, PA
1004 HAY STREET
FAYETTEVILLE, NC 28305
TEL 910-433-2600
FAX 910-433-2604
www.flemingandassociates.com

NORTH CAROLINA PROFESSIONAL ENGINEER SEAL 11278 STEPHEN FLEMING
10/22/19

Fayetteville Regional Airport - Airline Terminal Improvements Part 2

400 Airport Road
Fayetteville, North Carolina 28306

TUG CANOPY SECTIONS

DRAWN BY: SJD
REVIEWED BY: SF
DATE: 7-22-19
PROJECT NO.: 1515

REVISIONS

SHEET NUMBER
S9.00

#19-59