FIRE PROTECTION LEGEND

PIPING SYMBOLS

SYMBOL	DESCRIPTION
DSP	DRY SPRINKLER LINE
F	FIRE LINE
D	SPRINKLER DRAIN LINE
SPR	SPRINKLER LINE

COMPONENTS AND SPECIALTIES

SYMBOL	DESCRIPTION
FS	FLOW SWITCH
PS	PRESSURE SWITCH
	OUTSIDE STEM AND YOKE VALVE WITH TAMPER SWITCH
TS	OUTSIDE STEM AND YOKE VALVE WITH TAMPER SWITCH
	SPRINKLER HEAD
	SIDEWALL SPRINKLER HEAD
	FIRE DEPARTMENT SIAMESE CONNECTION (WALL MOUNTED)
	FIRE DEPARTMENT SIAMESE CONNECTION (FREE-STANDING)
	ALARM CHECK VALVE
	DRY PIPE VALVE
	DRY PIPE VALVE WITH ACCELERATOR OR EXHAUSTER
	WATER MOTOR GONG
	TWO-HOSE CONNECTION WALL HYDRANT

EQUIPMENT DESIGNATIONS

DESIGNATION	DESCRIPTION
DSAC-X	DRY SYSTEM AIR COMPRESSOR DESIGNATION

RISER DESIGNATIONS

SYMBOL	DESCRIPTION
F	RISER NUMBER FIRE RISER DESIGNATION (STANDPIPE/DRAIN)

GENERAL SYMBOLS

PIPING SYMBOLS

SYMBOL	DESCRIPTION
	PIPE DROP
	PIPE RISE
	PIPE CAP
	BRANCH TAKE OFF
	PIPE DROP TEE
	PIPE RISE TEE
	SHUTOFF VALVE (REFER TO SPECIFICATIONS FOR TYPE)
	CHECK VALVE
	OUTSIDE STEM AND YOKE VALVE
	SAFETY RELIEF VALVE
	STRAINER
	STRAINER WITH BLOWDOWN VALVE
	PRESSURE REDUCING VALVE
	PRESSURE RELIEF VALVE
	BALL VALVE
	SHUTOFF VALVE COCK
	GLOBE VALVE
	WEDGE PLUG VALVE
	ANGLE VALVE (ELEVATION)
	ANGLE VALVE (PLAN VIEW)
	UNION
	PIPE FLANGE
	ECCENTRIC REDUCER (FLAT ON BOTTOM)
	ECCENTRIC REDUCER (FLAT ON TOP)
	CONCENTRIC REDUCER
	SIGHT GLASS
	AUTOMATIC AIR VENT
	MANUAL AIR VENT
	PRESSURE GAUGE WITH BALL VALVE
	FLOW ARROW

LINETYPE SYMBOLS

DESIGNATION	DESCRIPTION
	NEW WORK
	MATCHLINE
	PART PLAN DESIGNATION

REFERENCE SYMBOLS

DESIGNATION	DESCRIPTION
XX / X X	FLOOR PLAN NUMBER PARTIAL FLOOR PLAN NUMBER ELEVATION = LETTER DETAIL = NUMBER
	SHEET NUMBER ON WHICH THE PARTIAL PLAN, ELEVATION OR DETAIL IS DRAWN
	SHEET NUMBER WHERE PARTIAL PLAN, ELEVATION OR DETAIL IS TAKEN FROM
XX / X X	SECTION LETTER
	SHEET NUMBER ON WHICH THE SECTION IS DRAWN
	SHEET NUMBER WHERE THE SECTION IS TAKEN FROM
XX,XX	PIPE CONTINUATION DESIGNATION
X X	SHEET FOR CONTINUATION, SHEET COORDINATES OR PIPE CONTINUATION DESIGNATION LETTER
	SYSTEM CONTINUATION NOTES
N	NORTH ARROW
	POINT OF CONNECTION TO EXISTING
	POINT OF DISCONNECTION

TEXT SYMBOLS

SYMBOL	DESCRIPTION
&	AND
@	AT
°F	DEGREE(S) FAHRENHEIT
°C	DEGREE(S) CELSIUS
ø	DIAMETER, PHASE
/	DIVIDE BY, PER
$	DOLLAR
=	EQUALS, EQUAL TO
x'	FEET, FOOT
>	GREATER THAN
≥	GREATER THAN OR EQUAL TO
x"	INCH(ES)
<	LESS THAN
≤	LESS THAN OR EQUAL TO
-	MINUS
x	MULTIPLY BY, BY
#	NUMBER, POUND
%	PERCENT
+	PLUS
±	PLUS OR MINUS

SPRINKLER SYSTEM DESIGN CRITERIA

1. THE FIRE PROTECTION CONTRACTOR SHALL DESIGN AND INSTALL AN AUTOMATIC WET SPRINKLER SYSTEM FOR THE ENTIRE BUILDING IN ACCORDANCE WITH NFPA-13, 2013.
2. THE MINIMUM DESIGN DENSITY SHALL BE 0.10 GPM PER SQUARE FOOT FOR THE HYDRAULICALLY MOST REMOTE 1,500 SQUARE FEET. LIGHT HAZARD AS DEFINED BY NFPA-13, 2013.
3. THE HYDRAULIC CALCULATIONS SHALL INCLUDE A 250 GALLON PER MINUTE ALLOWANCE FOR HOSE STREAMS, 10% FLOW SAFETY FACTOR AND TEN (10) POUND PER SQUARE INCH SAFETY FACTOR ON STATIC AND RESIDUAL PRESSURES FOR FUTURE WATER SUPPLY DETERIORATION.
4. WATER FLOW DATA:
   SOURCE (PRESSURE HYDRANT): 8" WATER MAIN 400 AIRPORT ROAD (HYDRANT No. 005259, BACK OF AIRPORT)
   STATIC PRESSURE: 75 PSI
   RESIDUAL PRESSURE: 55 PSI @ 1,720 GPM THROUGH HYDRANT No. 005259
   TESTED BY: CITY OF FAYETTEVILLE
   DATE TESTED:

   THE FIRE PROTECTION CONTRACTOR SHALL FIELD VERIFY ALL WATER FLOW DATA PRIOR TO DESIGNING AND INSTALLING THE SPRINKLER SYSTEM.
5. EACH FLOOR SHALL CONSTITUTE A SPRINKLER ZONE, UNLESS INDICATED OTHERWISE ON THE DRAWING.
6. AREAS OTHER THAN LIGHT HAZARD ARE DESCRIBED IN THE SPECIFICATIONS AND IDENTIFIED ON THE FLOOR PLANS.

BUILDING FIRE FLOW CALCULATION

BUILDING TYPE	AREA (SF)	FIRE FLOW REQD (GPM)	SPRINKLER REDUCTION (75%)	AVAILABLE FLOW (GPM)	FLOW DURATION (HR)
II B	108,524	7,000	1,750	4,200	4

* FLOWS ARE MEASURED AT 20 PSI RESIDUAL PRESSURE.
* FIRE FLOW CALCULATION IS BASED ON 2018 NC FIRE PREVENTION CODE, APPENDIX B, TABLE B105.1.

DRY SYSTEM AIR COMPRESSOR DUTY

DESIGNATION :	DSAC-2	DSAC-3
SERVICE :	MAIN TERMINAL - RAMP LEVEL NORTH SIDE (CANOPY)	MAIN TERMINAL - RAMP LEVEL SOUTH SIDE AND CONCOURSE B - RAMP LEVEL
COMPRESSOR		
NUMBER :	2	3
CAPACITY :	7.9 CFM @ 40 PSI	7.9 CFM @ 40 PSI
OPERATING PRESSURE :	40 PSI	40 PSI
MOTOR HP :	1 1/2 HP	1 1/2 HP
RPM :		
ELECTRICAL :	115V/1ø/60HZ	115V/1ø/60HZ
REMARKS :	ON EMERGENCY POWER	ON EMERGENCY POWER

GORDON JOHNSON
Architecture
934 Hay Street, Suite A
Fayetteville, NC 28305
Phone: (910) 323-3960
E-mail: gordon@gordonjohnsonarchitecture.com

© Copyright 2019 Gordon E. Johnson, AIA
Reproduction or publication of this document in whole or in part without the expressed consent of the above.
Legal Disclaimer
The Gordon Johnson Architecture's scope with the responsibility of the Gordon Johnson Architecture (GJA) Owner, Architects and Engineers are not licensed to interpret laws or give advice concerning laws. The Owner should have the document reviewed by his attorney to determine if it complies with this and other laws.

RMF ENGINEERING, INC.
8720 Red Oak Blvd, Suite 370
Charlotte, NC 28217
P: 704.909.6612
NC license No: C-1126
RMF Project No: 2153223.F0

Fayetteville Regional Airport - Airline Terminal Improvements Part 2
400 Airport Road
Fayetteville, North Carolina 28306

FIRE PROTECTION LEGEND, SYMBOLS, AND DESIGN CRITERIA

DRAWN BY: BMC
REVIEWED BY: AJM
DATE: 07-19-19
PROJECT NO.: 1808

REVISIONS

SHEET NUMBER
FP0.01

GENERAL ABBREVIATIONS

NOTE: THIS IS A STANDARD ABBREVIATION LIST. SOME ABBREVIATIONS MAY NOT APPEAR ON THE ACCOMPANYING DRAWINGS.

A	COMPRESSED AIR
AAV	AUTOMATIC AIR VENT
ACV	AUTOMATIC CONTROL VALVE
AD	ACCESS DOOR, AREA DRAIN
AF	ANTIFREEZE
AFF	ABOVE FINISHED FLOOR
AR	ARGON GAS
ATC	AUTOMATIC TEMPERATURE CONTROL
BAS	BUILDING AUTOMATION SYSTEM
BBD	BOILER BLOWDOWN
BCWR	BEARING COOLING WATER RETURN
BCWS	BEARING COOLING WATER SUPPLY
BDD	BACKDRAFT DAMPER
BFP	BACKFLOW PREVENTER
BHP	BRAKE HORSEPOWER
BMS	BUILDING MANAGEMENT SYSTEM
BO	BLOW OFF
BTU	BRITISH THERMAL UNIT
BTUH	BRITISH THERMAL UNIT PER HOUR
°C	DEGREE(S) CELSIUS
CA	CONTROL AIR
CBD	CONTINUOUS BLOWDOWN
CC	CAMPUS CONDENSATE
CCMS	CENTRAL CONTROL AND MONITORING SYSTEM
CD	CONDENSATE DRAIN
CF	CHEMICAL FEED
CFM	CUBIC FEET PER MINUTE
CHR	CHILLED WATER RETURN
CHS	CHILLED WATER SUPPLY
CO	CLEANOUT
CO2	CARBON DIOXIDE
CS	CLEAN STEAM
CW	COLD WATER, CITY WATER
CWR	CONDENSER WATER RETURN
CWS	CONDENSER WATER SUPPLY
D	DEEP, DRAIN WATER
DB	DECIBEL, DRY BULB
DDC	DIRECT DIGITAL CONTROL
DHR	DISTRIBUTION HEATING WATER RETURN
DHS	DISTRIBUTION HEATING WATER SUPPLY
DIR	DEIONIZED WATER RETURN
DIS	DEIONIZED WATER SUPPLY
DL	DOOR LOUVER
DN	DOWN
DSP	DRY SPRINKLER PIPE
DTR	DUAL TEMPERATURE RETURN
DTS	DUAL TEMPERATURE SUPPLY
DW	DISTILLED WATER
EA	EXHAUST AIR
EAT	ENTERING AIR TEMPERATURE
EJ	EXPANSION JOINT
EMS	ENERGY MANAGEMENT SYSTEM
ESP	EXTERNAL STATIC PRESSURE
ETC	ETCETERA
EVAC	GAS EVACUATION
EWT	ENTERING WATER TEMPERATURE
EX	EXISTING
°F	DEGREE(S) FAHRENHEIT
F	FIRE LINE
FC	FLEXIBLE CONNECTION
FD	FIRE DAMPER, FOUNDATION DRAIN
FDV	FIRE DEPARTMENT VALVE
FF	FINISHED FLOOR
FFE	FINISHED FLOOR ELEVATION
FIN/FT	FINS PER FEET
FIN/INCH	FINS PER INCH
FM	FLOWMETER
FMF	FLOWMETER FITTING
FOF	FUEL OIL FILL
FOO	FUEL OIL OVERFLOW
FOR	FUEL OIL RETURN
FOS	FUEL OIL SUPPLY
FOT	FUEL OIL TRANSFER
FOV	FUEL OIL VENT
FPM	FEET PER MINUTE
FPS	FEET PER SECOND
FS	FLOW SWITCH
FT	FOOT, FEET
FWR	FEED WATER RETURN
FWS	FEED WATER SUPPLY
G	NATURAL GAS
GHR	GLYCOL HEATING RETURN
GHS	GLYCOL HEATING SUPPLY
GPH	GALLONS PER HOUR
GPM	GALLONS PER MINUTE
GR	AUTOMOTIVE LUBRICATION PIPING
H	HIGH
HB	HOSE BIBB
HED	HOSE END DRAIN VALVE
HP	HORSEPOWER
HPR	HIGH PRESSURE STEAM RETURN
HPS	HIGH PRESSURE STEAM SUPPLY
HR	HEATING WATER RETURN
HRR	HEAT RECOVERY RETURN
HRS	HEAT RECOVERY SUPPLY
HS	HEATING WATER SUPPLY
HT	HEIGHT
HTHR	HIGH TEMPERATURE HEATING WATER RETURN
HTHS	HIGH TEMPERATURE HEATING WATER SUPPLY
HW	HOT WATER
HWR	HOT WATER RECIRCULATION
HZ	HERTZ
IA	INSTRUMENT AIR
ICW	INDUSTRIAL COLD WATER
IHW	INDUSTRIAL HOT WATER
IHR	INDUSTRIAL HOT WATER RECIRCULATION
IN	INCH, INCHES
INV EL	INVERT ELEVATION
KW	KILOWATTS
L	LONG, LENGTH
LA	LABORATORY AIR
LAT	LEAVING AIR TEMPERATURE
LBS	POUNDS
LBS/HR	POUNDS PER HOUR
LN	LIQUID NITROGEN
LP	LIQUID PROPANE
LPG	LIQUID PETROLEUM GAS
LPR	LOW PRESSURE STEAM RETURN
LPS	LOW PRESSURE STEAM SUPPLY
LV	LABORATORY VENT, LABORATORY VACUUM
LW	LABORATORY WASTE
LWT	LEAVING WATER TEMPERATURE
MA	MEDICAL AIR
MAV	MANUAL AIR VENT
MBH	THOUSAND BRITISH THERMAL UNITS PER HOUR
MCC	MOTOR CONTROL CENTER
MO	MOTOR OIL PIPING
MOD	MOTOR OPERATED DAMPER
MPR	MEDIUM PRESSURE STEAM RETURN
MPS	MEDIUM PRESSURE STEAM SUPPLY
MV	MEDICAL VACUUM
N	NITROGEN
NA	NOT APPLICABLE
NC	NOISE CRITERIA, NORMALLY CLOSED
NFPA	NATIONAL FIRE PROTECTION ASSOCIATION
NO	NORMALLY OPEN, NITROUS OXIDE
NPSH	NET POSITIVE SUCTION HEAD
O	OXYGEN
OA	OUTSIDE AIR
OD	OVERFLOW DRAIN
OED	OPEN ENDED DUCT
OS&Y	OUTSIDE STEM AND YOKE
P&ID	PROCESS AND INSTRUMENTATION DIAGRAM
PA	PLANT AIR
PC	PUMPED CONDENSATE
PCR	PUMPED CONDENSATE RECIRCULATION
PCHR	PRIMARY CHILLED WATER RETURN
PCHS	PRIMARY CHILLED WATER SUPPLY
PCWR	PROCESS COOLING WATER RETURN
PCWS	PROCESS COOLING WATER SUPPLY
PD	PRESSURE DROP, PUMP DISCHARGE
PGR	PROCESS GLYCOL WATER RETURN
PGS	PROCESS GLYCOL WATER SUPPLY
PH	PHASE
PHR	PRIMARY HEATING RETURN
PHS	PRIMARY HEATING SUPPLY
PIV	POST INDICATING VALVE
PPH	POUNDS PER HOUR
PRV	PRESSURE REDUCING VALVE, PRESSURE REGULATING VALVE
PSI	POUNDS PER SQUARE INCH
PSIG	POUNDS PER SQUARE INCH GAUGE
RA	RETURN AIR, RELIEF AIR
RD	REFRIGERANT DISCHARGE
RH	RELATIVE HUMIDITY
RHR	REHEAT WATER RETURN
RHS	REHEAT WATER SUPPLY
RL	REFRIGERANT LIQUID
ROR	REVERSE OSMOSIS WATER RETURN
ROS	REVERSE OSMOSIS WATER SUPPLY
RPM	REVOLUTIONS PER MINUTE
RS	REFRIGERANT SUCTION
RV	RELIEF VENT, REFRIGERANT VENT
RX	REMOVE EXISTING
SA	SUPPLY AIR
SAN	SANITARY, SOIL, WASTE
SCHR	SECONDARY CHILLED WATER RETURN
SCHS	SECONDARY CHILLED WATER SUPPLY
SD	STORM DRAIN, SMOKE DETECTOR
SF	SQUARE FOOT
SHR	SECONDARY HEATING WATER RETURN
SHS	SECONDARY HEATING WATER SUPPLY
SL	SOUND LINING
SP	STATIC PRESSURE
SPR	SPRINKLER LINE
SS	STAINLESS STEEL
SQ FT	SQUARE FOOT
SW	SOFT WATER
ΔT	TEMPERATURE DIFFERENCE
TS	TAMPER SWITCH
TSP	TOTAL STATIC PRESSURE
TWR	TEMPERED WATER RETURN
TWS	TEMPERED WATER SUPPLY
TW	TREATED WATER
TYP	TYPICAL
UCD	UNDERCUT DOOR
UL	UNDERWRITERS LABORATORIES
V	VACUUM, VOLTS
VD	VOLUME DAMPER
VFD	VARIABLE FREQUENCY DRIVE
VPD	VACUUM PUMP DISCHARGE
VSD	VARIABLE SPEED DRIVE
VTR	VENT THROUGH ROOF
W	WATTS, WIDE
WB	WET BULB
WC	WATER COLUMN
WG	WATER GAUGE
WH	WALL HYDRANT
WWF	WELDED WIRE FABRIC
WWM	WELDED WIRE MESH

GORDON JOHNSON
Architecture
834 Hay Street, Suite A
Fayetteville, NC 28305
Phone: (910) 222-2968
E-mail: gordon@gordonjohnsonarchitecture.com

© Copyright 2019 Gordon E. Johnson, AIA
Reproduction or publication of this document is not permitted without the expressed consent of the above.
Legal Disclaimer
This document shall not be deemed to comply with the requirements of the American with Disabilities Act (ADA) Federal, multiform and Engineers are not licensed to interpret laws or give advice concerning laws. The client should have the document reviewed by the attorney to determine if it complies with this and other laws.

RMF ENGINEERING, INC.
8720 Red Oak Blvd. Suite 370
Charlotte, NC 28217
P: 704.909.6612
NC license No: C-1126
RMF Project No: 2153223.F0

Fayetteville Regional Airport – Airline Terminal Improvements Part 2

400 Airport Road
Fayetteville, North Carolina 28306

FIRE PROTECTION ABBREVIATIONS

DRAWN BY: BMC
REVIEWED BY: ALM
DATE: 07-19-19
PROJECT NO.: 1808

REVISIONS

SHEET NUMBER
FP0.02

DRAWING NOTE:

1. TEMPORARY SPRINKLER PIPING WILL REMAIN UNTIL ALL NEW WORK FOR EVERY DISCIPLINE IS COMPLETE IN AREA-B AND THE NEW TSA CHECKPOINT IS OPEN. ONCE AREA-B IS COMPLETE, THE SPRINKLER PIPING FOR THE TEMPORARY TSA CHECKPOINT WILL BE REMOVED ALONG WITH ALL ASSOCIATED BRANCH PIPING AND SPRINKLERS. NEW SPRINKLER PIPING WILL BE EXTENDED FROM AREA-B TO COVER THIS AREA. REFER TO ARCHITECTURAL PLANS FOR SPECIFIC PROJECT PHASING INSTRUCTIONS.

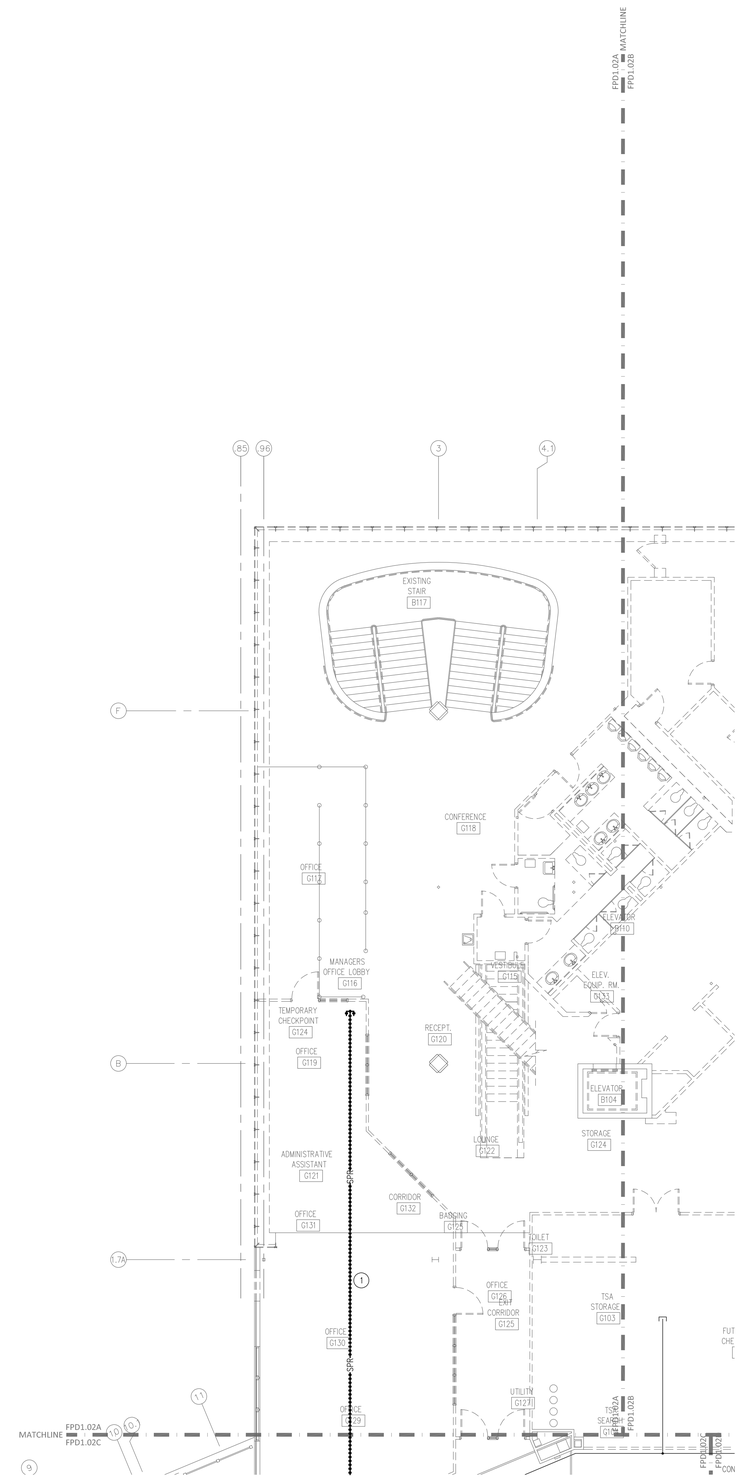

FIRE RATED WALL LEGEND

1 HOUR FIRE PARTITION

1 HOUR FIRE BARRIER

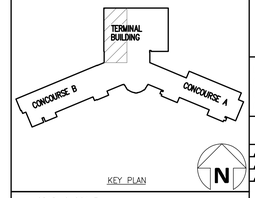

KEY PLAN

GRAPHIC SCALE

8 4 0 8 16

SCALE: 1/8"=1'-0"
UNIT OF MEASURE: FEET

GORDON JOHNSON
Architecture
834 Hay Street, Suite A
Fayetteville, NC 28305
Phone: (910) 222-2966
E-mail: gordon@gordonjohnsonarchitecture.com

© Copyright 2019 Gordon E. Johnson, AIA

Reproduction or publication of this document in not permitted without the expressed consent of the above.

Legal Disclaimer:
The Gordon Johnson Architecture is simply with the requirements of the Americans with Disabilities Act (ADA) however, Architects and Engineers are not licensed to interpret law or give advice concerning laws. The Owner should have this document reviewed by his attorney to determine if it complies with this and other laws.

RMF ENGINEERING, INC.
8720 Red Oak Blvd. Suite 370
Charlotte, NC 28217
P: 704.909.6612
NC license No: C-1126
RMF Project No: 2153223.F0

Fayetteville Regional Airport – Airline Terminal Improvements Part 2

400 Airport Road
Fayetteville, North Carolina 28306

SECOND FLOOR PLAN – AREA A – FIRE PROTECTION DEMOLITION

DRAWN BY: BMC
REVIEWED BY: ALM
DATE: 07-19-19
PROJECT NO.: 1808

REVISIONS

SHEET NUMBER

FPD1.02A

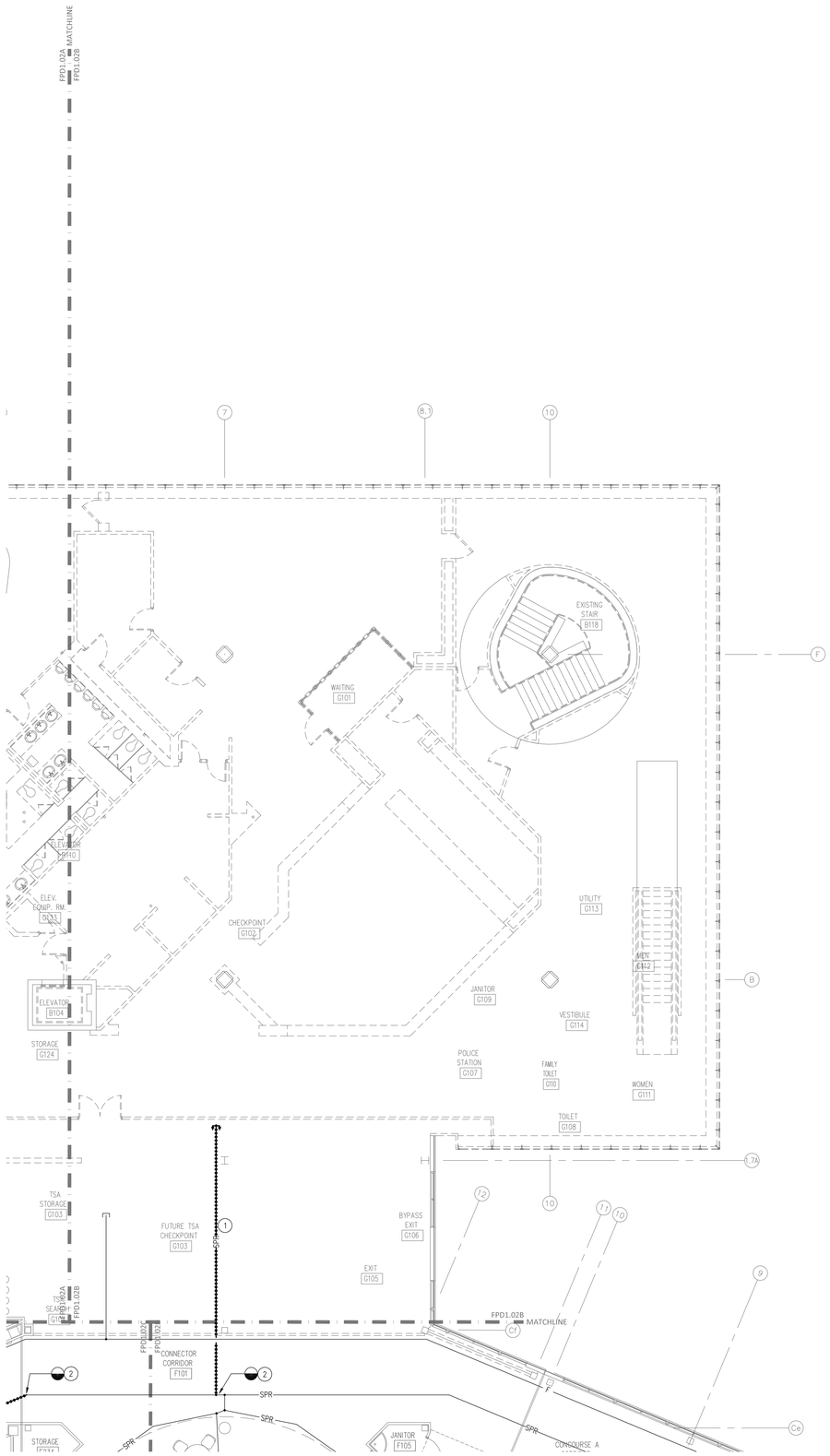

DRAWING NOTE:

1. REMOVE TEMPORARY SPRINKLER PIPING. REMOVE ALL BRANCH PIPING AND SPRINKLERS ASSOCIATED WITH THE REMOVED PIPING.
2. DISCONNECT AND CAP EXISTING SPRINKLER LINE IN THIS LOCATION. REMOVE ALL BRANCH PIPING AND SPRINKLER HEADS ASSOCIATED WITH REMOVED SECTION.

FIRE RATED WALL LEGEND

1 HOUR FIRE PARTITION
1 HOUR FIRE BARRIER

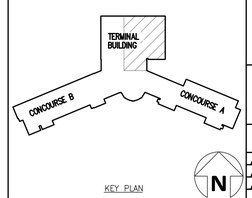

KEY PLAN

GRAPHIC SCALE

8 4 0 8 16

SCALE: 1/8"=1'-0"
UNIT OF MEASURE: FEET

GORDON JOHNSON
Architecture
834 Hay Street, Suite A
Fayetteville, NC 28305
Phone: (910) 222-2960
E-mail: gordon@
gordonjohnsonarchitects.com

© Copyright 2019
Gordon L. Johnson, AIA

Reproduction or publication of this document in not permitted without this expressed consent of the above.

Legal Disclaimer:
The Gordon Johnson Architect's scope with the requirements of the Americans with Disabilities Act (ADA) Owner, Architects and Engineers are not licensed to interpret law or give advice concerning law. The Owner should have this document reviewed by his attorney to determine if it complies with this and other laws.

RMF ENGINEERING, INC.
8720 Red Oak Blvd, Suite 370
Charlotte, NC 28217
P: 704.909.6612
NC license No: C-1126
RMF Project No: 2153223.F0

Fayetteville Regional Airport – Airline Terminal Improvements Part 2

400 Airport Road
Fayetteville, North Carolina 28306

SECOND FLOOR PLAN – AREA B – FIRE PROTECTION DEMOLITION

DRAWN BY: BMC
REVIEWED BY: ALM
DATE: 07-19-19
PROJECT NO.: 1808

REVISIONS

SHEET NUMBER

FPD1.02B

DRAWING NOTE:

1. TEMPORARY SPRINKLER PIPING WILL REMAIN UNTIL ALL NEW WORK FOR EVERY DISCIPLINE IS COMPLETE IN AREA–B AND THE NEW TSA CHECKPOINT IS OPEN. ONCE AREA–B IS COMPLETE, THE SPRINKLER PIPING FOR THE TEMPORARY TSA CHECKPOINT WILL BE REMOVED ALONG WITH ALL ASSOCIATED BRANCH PIPING AND SPRINKLERS. NEW SPRINKLER PIPING WILL BE EXTENDED FROM AREA–B TO COVER THIS AREA. REFER TO ARCHITECTURAL PLANS FOR SPECIFIC PROJECT PHASING INSTRUCTIONS.
2. DISCONNECT AND CAP EXISTING SPRINKLER LINE IN THIS LOCATION. REMOVE ALL BRANCH PIPING AND SPRINKLER HEADS ASSOCIATED WITH REMOVED SECTION.

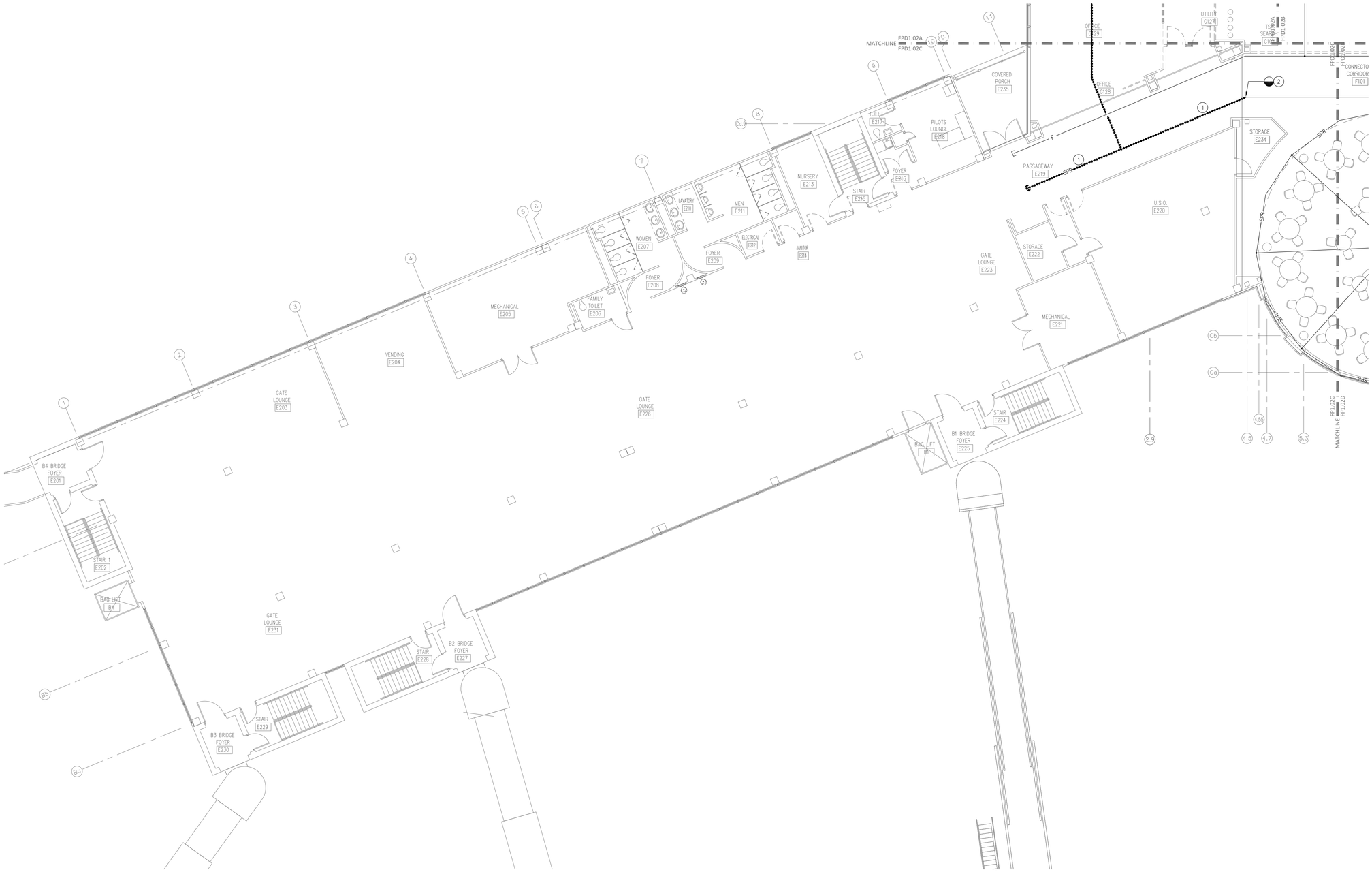

FIRE RATED WALL LEGEND

1 HOUR FIRE PARTITION
1 HOUR FIRE BARRIER

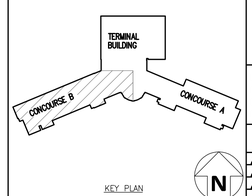

KEY PLAN

GRAPHIC SCALE

8 4 0 8 16

SCALE: 1/8"=1'-0"
UNIT OF MEASURE: FEET

GORDON JOHNSON
Architecture
834 Hay Street, Suite A
Fayetteville, NC 28305
Phone: (910) 222-2966
E-mail: gordon@gordonjohnsonarchitects.com

© Copyright 2019 Gordon E. Johnson, AIA

Reproduction or publication of this document is not permitted without the expressed consent of the above.

Legal Disclaimer
The Gordon Johnson Architect's scope with the responsibility of the Gordon Johnson Architects (GJA) Owner, Architects and Engineers are not licensed to interpret laws or give advice concerning laws. The Owner should have the document reviewed by his attorney to determine if it complies with this and other laws.

RMF ENGINEERING, INC.
8720 Red Oak Blvd. Suite 370
Charlotte, NC 28217
P: 704.909.6612
NC license No: C-1126
RMF Project No: 2153223.F0

Fayetteville Regional Airport – Airline Terminal Improvements Part 2

400 Airport Road
Fayetteville, North Carolina 28306

SECOND FLOOR PLAN – AREA C – FIRE PROTECTION DEMOLITION

DRAWN BY: BMC
REVIEWED BY: ALM
DATE: 07-19-19
PROJECT NO.: 1808

REVISIONS

SHEET NUMBER

FPD1.02C

GENERAL NOTES:

1. COORDINATE SPRINKLER TYPE WITH CEILING TYPES. SEE ARCHITECTURAL REFLECTED CEILING PLANS FOR DESIGN INTENT..

DRAWING NOTES:

1. PROVIDE INTERMEDIATE TEMPERATURE SPRINKLER IN THE ELEVATOR/ESCALATOR EQUIPMENT ROOM.
2. PROVIDE INTERMEDIATE TEMPERATURE SPRINKLER AT THE TOP OF THE ELEVATOR SHAFT AND IN THE ELEVATOR PIT IN ACCORDANCE WITH NFPA-13, 2013
3. PROVIDE DRY SYSTEM INSPECTOR'S TEST CONNECTIONS WITH SITE GLASS AND DRAIN AT HYDRAULICALLY MOST REMOTE LOCATION.
4. REFER TO ARCHITECTURAL DRAWINGS TO COORDINATE DRY SPRINKLER LOCATIONS WITH LIGHTING AND STRUCTURE FOR THE EXTERIOR CANOPY.
5. PROVIDE DRAIN VALVE FOR SECOND FLOOR ZONE CONTROL VALVE ASSEMBLY BELOW THE EXTERIOR FIRST FLOOR CANOPY.

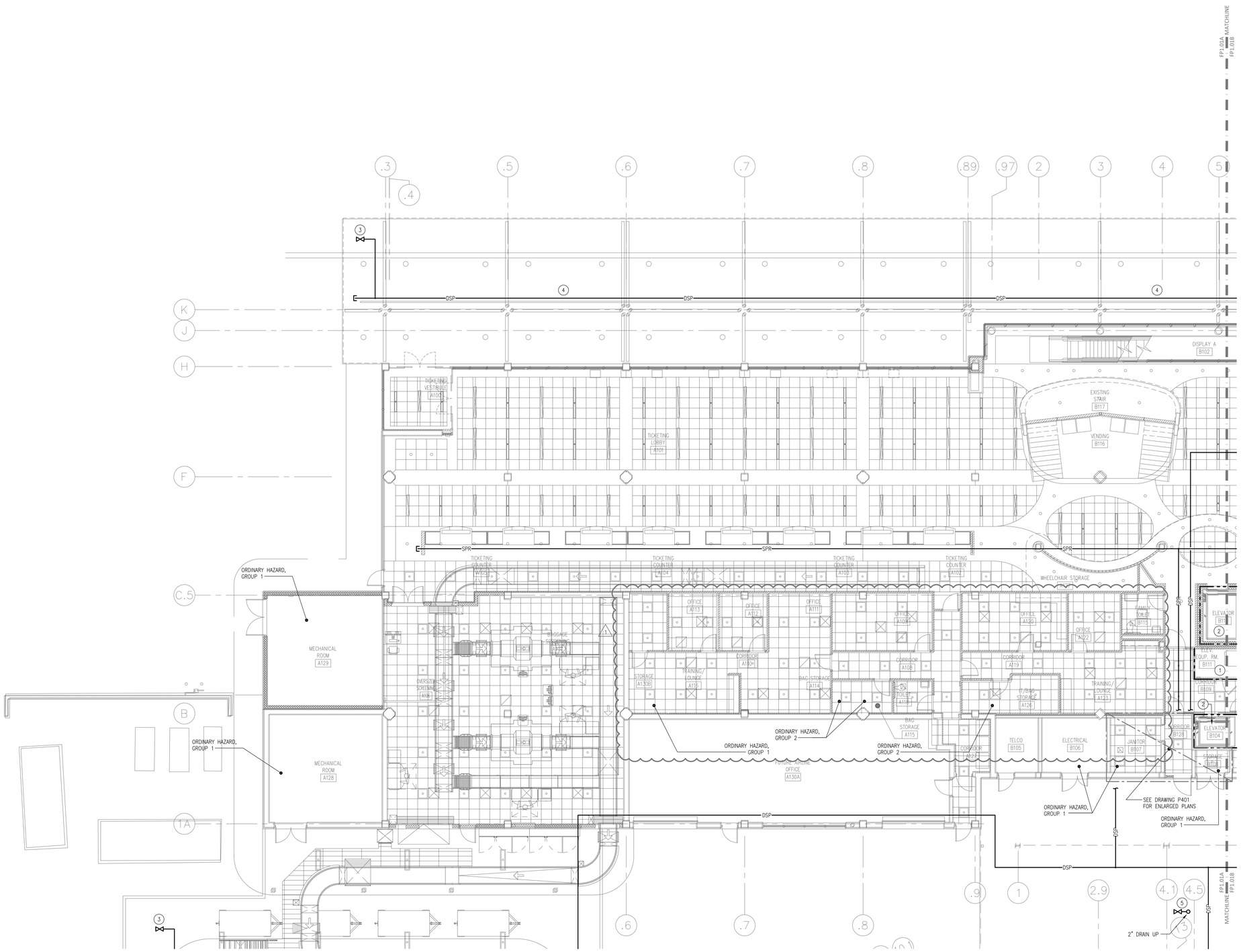

FIRE RATED WALL LEGEND

1 HOUR FIRE PARTITION
1 HOUR FIRE BARRIER

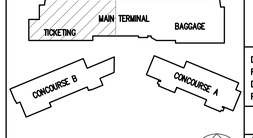

KEY PLAN

GRAPHIC SCALE

8 4 0 8 16

SCALE: 1/8"=1'-0"
UNIT OF MEASURE: FEET

GORDON JOHNSON
Architecture
834 Hay Street, Suite A
Fayetteville, NC 28305
Phone: (910) 222-2966
E-mail: gordon@gordonjohnsonarchitects.com

© Copyright 2019 Gordon L. Johnson, AIA

Reproduction or publication of this document in not permitted without the expressed consent of the above.

Legal Disclaimer:
The Gordon Johnson Architects complies with the requirements of the American with Disabilities Act (ADA) however, Architects and Engineers are not licensed to interpret law or give advice concerning laws. The Owner should have this document reviewed by his attorney to determine if it complies with this and other laws.

RMF ENGINEERING, INC.
8720 Red Oak Blvd. Suite 370
Charlotte, NC 28217
P: 704.909.6612
NC license No: C-1126
RMF Project No: 2153223.F0

Fayetteville Regional Airport – Airline Terminal Improvements Part 2

400 Airport Road
Fayetteville, North Carolina 28306

FIRST FLOOR PLAN – AREA A – FIRE PROTECTION

DRAWN BY: BMC
REVIEWED BY: ALM
DATE: 07-19-19
PROJECT NO.: 1808

REVISIONS

1	CBFP1	10/02/20
2		
3		

SHEET NUMBER

FP1.01A

GENERAL NOTES:

1. COORDINATE SPRINKLER TYPE WITH CEILING TYPES. SEE ARCHITECTURAL REFLECTED CEILING PLANS FOR DESIGN INTENT..

DRAWING NOTES:

1. PROVIDE INTERMEDIATE TEMPERATURE SPRINKLER IN THE ELEVATOR EQUIPMENT ROOM.
2. PROVIDE INTERMEDIATE TEMPERATURE SPRINKLER AT THE TOP OF THE ELEVATOR SHAFT AND IN THE ELEVATOR PIT IN ACCORDANCE WITH NFPA-13, 2013
3. PROVIDE DRY SYSTEM INSPECTOR'S TEST CONNECTIONS WITH SITE GLASS AND DRAIN AT HYDRAULICALLY MOST REMOTE LOCATION.
4. REFER TO ARCHITECTURAL DRAWINGS TO COORDINATE DRY SPRINKLER LOCATIONS WITH LIGHTING AND STRUCTURE FOR THE EXTERIOR CANOPY.

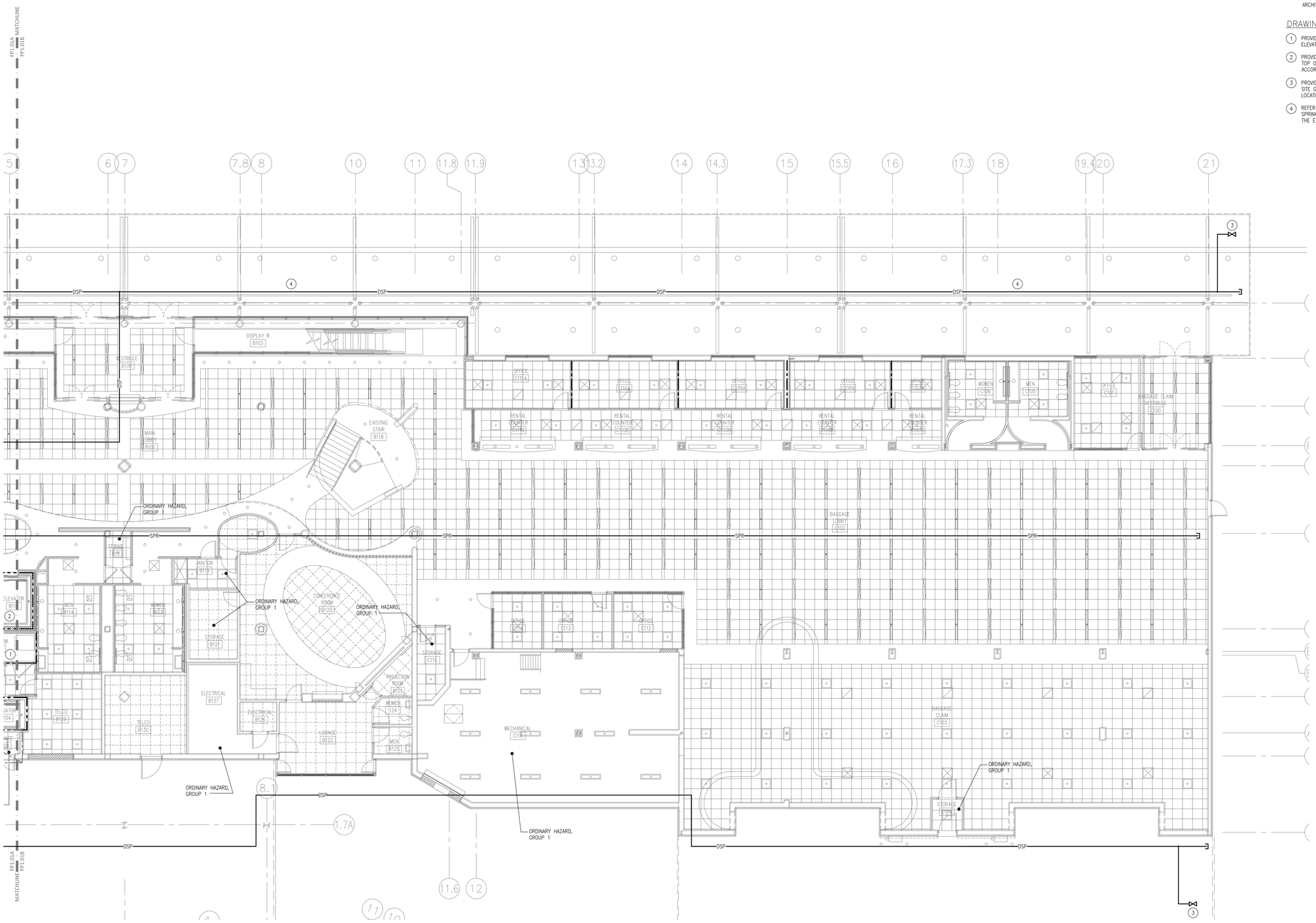

FIRE RATED WALL LEGEND

1 HOUR FIRE PARTITION
1 HOUR FIRE BARRIER

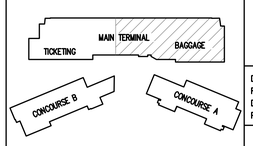

KEY PLAN

GRAPHIC SCALE

8 4 0 8 16

SCALE: 1/8"=1'-0"
UNIT OF MEASURE: FEET

GORDON JOHNSON
Architecture
834 Hay Street, Suite A
Fayetteville, NC 28305
Phone: (910) 222-2966
E-mail: gordon@gordonjohnsonarchitecture.com

© Copyright 2019 Gordon L. Johnson, AIA

Reproduction or publication of this document in whole or in part without written permission of the Gordon L. Johnson, AIA.

Legal Disclaimer:
The Gordon L. Johnson, AIA, P.A. complies with the requirements of the American with Disabilities Act (ADA). However, Architects and Engineers are not licensed to interpret law or give advice concerning laws. The client should have this document reviewed by his attorney to determine if it complies with this and other laws.

RMF ENGINEERING, INC.
8720 Red Oak Blvd. Suite 370
Charlotte, NC 28217
P: 704.909.6612
NC license No: C-1126
RMF Project No: 2153223.F0

Fayetteville Regional Airport – Airline Terminal Improvements

400 Airport Road
Fayetteville, North Carolina 28306

FIRST FLOOR PLAN – AREA B – FIRE PROTECTION

DRAWN BY: BMC
REVIEWED BY: ALM
DATE: 07-19-19
PROJECT NO.: 1808

REVISIONS

SHEET NUMBER

FP1.01B

GENERAL NOTES:

1. COORDINATE SPRINKLER TYPE WITH CEILING TYPES. SEE ARCHITECTURAL REFLECTED CEILING PLANS FOR DESIGN INTENT..

DRAWING NOTES:

1. PROVIDE INTERMEDIATE TEMPERATURE SPRINKLER IN THE ELEVATOR EQUIPMENT ROOM. (ALTERNATE G-1)
2. PROVIDE INTERMEDIATE TEMPERATURE SPRINKLER AT THE TOP OF THE ELEVATOR SHAFT AND IN THE ELEVATOR PIT IN ACCORDANCE WITH NFPA-13, 2013. (ALTERNATE G-1)
3. PROVIDE DRY SYSTEM INSPECTOR'S TEST CONNECTIONS WITH SITE GLASS AND DRAIN AT HYDRAULICALLY MOST REMOTE LOCATION.
4. PROVIDE SPRINKLER BELOW THE LOWEST STAIR LANDING.

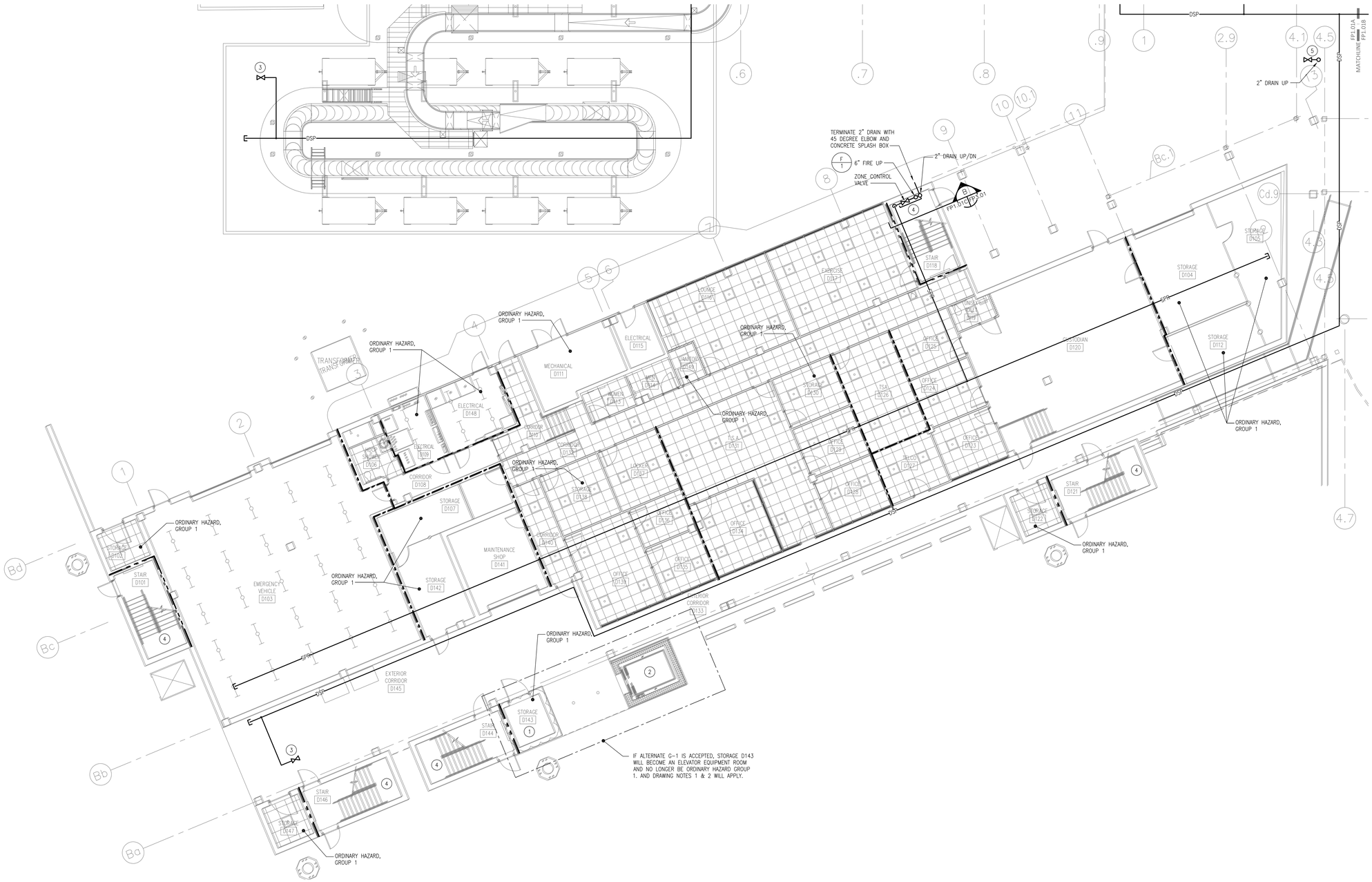

FIRE RATED WALL LEGEND

1 HOUR FIRE PARTITION
1 HOUR FIRE BARRIER

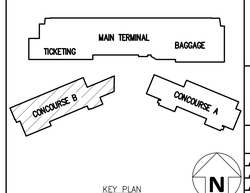

KEY PLAN

GRAPHIC SCALE

8 4 0 8 16

SCALE: 1/8"=1'-0"
UNIT OF MEASURE: FEET

GORDON JOHNSON
Architecture
834 Hay Street, Suite 1
Fayetteville, NC 28305
Phone: (910) 222-2966
E-mail: gordon@gordonjohnsonarchitects.com

© Copyright 2019 Gordon L. Johnson, AIA

Reproduction or publication of this document in not permitted without the expressed consent of the above.

Legal Disclaimer:
The Seal on this document is simply with the requirements of the Revised AIA Contract Document B101 Owner, Architect and Engineer are not licensed to interpret law or give advice concerning laws. The Owner should have this document reviewed by his attorney to determine if it complies with this and other laws.

RMF ENGINEERING, INC.
8720 Red Oak Blvd. Suite 370
Charlotte, NC 28217
P: 704.909.6612
NC license No: C-1126
RMF Project No: 2153223.F0

Fayetteville Regional Airport – Airline Terminal Improvements Part 2

400 Airport Road
Fayetteville, North Carolina 28306

FIRST FLOOR PLAN – AREA C – FIRE PROTECTION

DRAWN BY: BMC
REVIEWED BY: JLM
DATE: 07-19-19
PROJECT NO.: 1808

REVISIONS

SHEET NUMBER

FP1.01C

GENERAL NOTES:

1. COORDINATE SPRINKLER TYPE WITH CEILING TYPES. SEE ARCHITECTURAL REFLECTED CEILING PLANS FOR DESIGN INTENT..

DRAWING NOTES:

1. PROVIDE INTERMEDIATE-TEMPERATURE SPRINKLER AT THE TOP OF THE ELEVATOR HOISTWAY.
2. PROVIDE INTERMEDIATE TEMPERATURE SPRINKLER IN THE ELEVATOR EQUIPMENT ROOM.
3. ARRANGE SPRINKLERS IN A UNIFORM PATTERN WITHIN THE CIRCULAR GYPSUM BOARD CEILING. SPACING AND PLACEMENT SHOULD BE SIMILAR IN EACH QUADRANT.

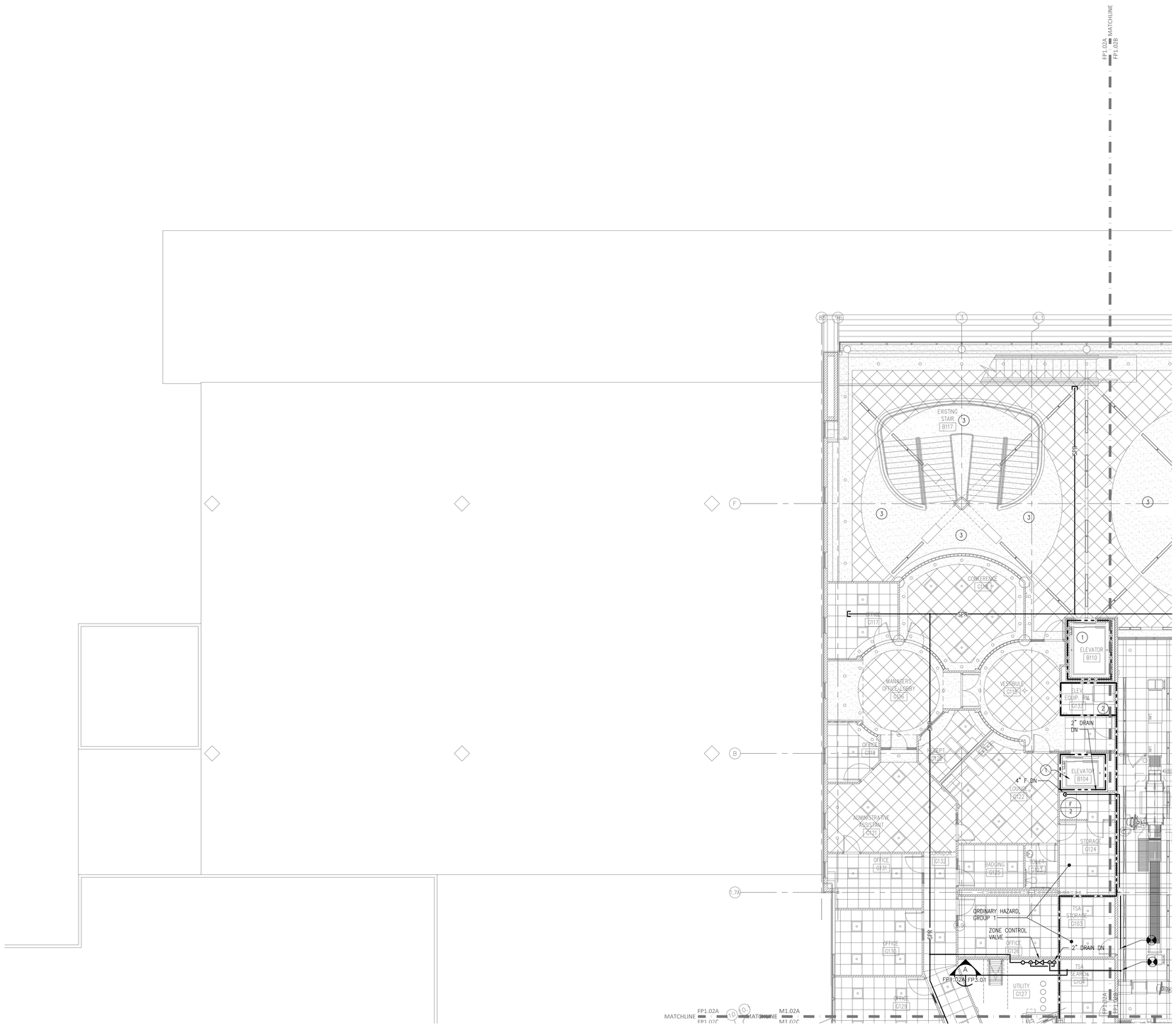

FIRE RATED WALL LEGEND

1 HOUR FIRE PARTITION
1 HOUR FIRE BARRIER

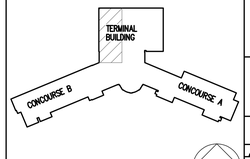

KEY PLAN

GRAPHIC SCALE

8 4 0 8 16

SCALE: 1/8"=1'-0"
UNIT OF MEASURE: FEET

GORDON JOHNSON
Architecture
834 Hay Street, Suite A
Fayetteville, NC 28305
Phone: (910) 222-2966
E-mail: gordon@gordonjohnsonarchitecture.com

© Copyright 2019 Gordon L. Johnson, AIA

Reproduction or publication of this document in not permitted without the expressed consent of the above.

Legal Disclaimer:
The Seal on this document is simply with the requirements of the Revised AIA Contract Document B101 Owner, Architect and Engineer are not licensed to interpret law or give advice concerning laws. The Owner should have this document reviewed by his attorney to determine if it complies with this and other laws.

RMF ENGINEERING, INC.
8720 Red Oak Blvd. Suite 370
Charlotte, NC 28217
P: 704.909.6612
NC license No: C-1126
RMF Project No: 2153223.F0

Fayetteville Regional Airport – Airline Terminal Improvements Part 2

400 Airport Road
Fayetteville, North Carolina 28306

SECOND FLOOR PLAN – AREA A – FIRE PROTECTION

DRAWN BY: BMC
REVIEWED BY: ALM
DATE: 07-19-19
PROJECT NO.: 1808

REVISIONS

SHEET NUMBER

FP1.02A

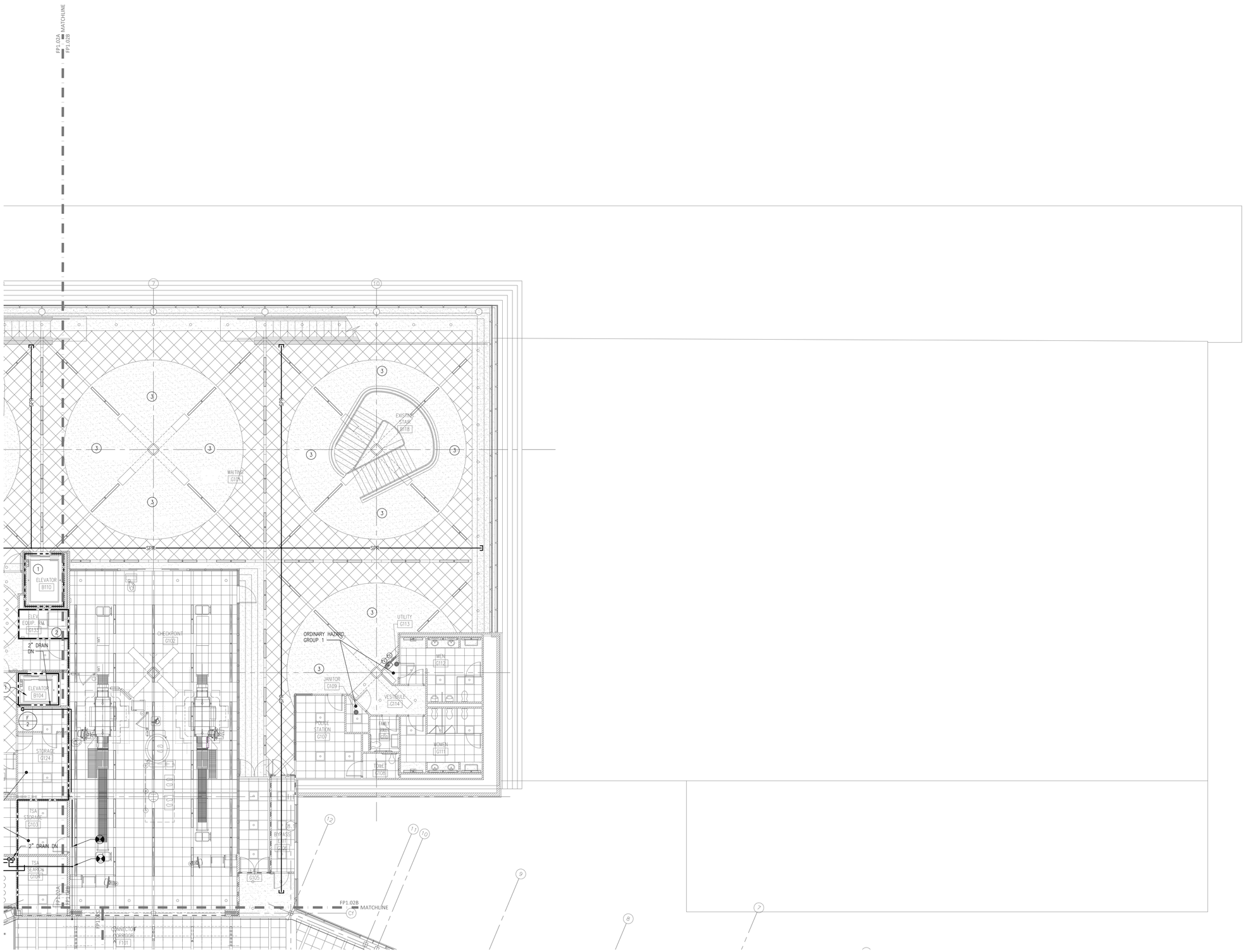

GENERAL NOTES:

1. COORDINATE SPRINKLER TYPE WITH CEILING TYPES. SEE ARCHITECTURAL REFLECTED CEILING PLANS FOR DESIGN INTENT..

DRAWING NOTES:

1. PROVIDE INTERMEDIATE-TEMPERATURE SPRINKLER AT THE TOP OF THE ELEVATOR HOISTWAY.
2. PROVIDE INTERMEDIATE TEMPERATURE SPRINKLER IN THE ELEVATOR EQUIPMENT ROOM.
3. ARRANGE SPRINKLERS IN A UNIFORM PATTERN WITHIN THE CIRCULAR GYPSUM BOARD CEILING. SPACING AND PLACEMENT SHOULD BE SIMILAR IN EACH QUADRANT.

FIRE RATED WALL LEGEND

1 HOUR FIRE PARTITION
1 HOUR FIRE BARRIER

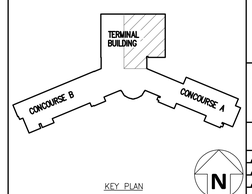

KEY PLAN

GRAPHIC SCALE

8 4 0 8 16

SCALE: 1/8"=1'-0"
UNIT OF MEASURE: FEET

GORDON JOHNSON
Architecture
834 Key Street, Suite A
Fayetteville, NC 28305
Phone: (910) 222-2966
E-mail: gordon@gordonjohnsonarchitecture.com

© Copyright 2019
Gordon L. Johnson, AIA

Reproduction or publication of this document in not permitted without the expressed consent of the above.

Legal Disclaimer:
The Seal on this document is except with the expressed of the Gordon Johnson Architecture (GJA) Owner, Architects and Engineers are not licensed to interpret law or give advice concerning laws. The Owner should have the document reviewed by his attorney to determine if it complies with this and other laws.

RMF ENGINEERING, INC.
8720 Red Oak Blvd. Suite 370
Charlotte, NC 28217
P: 704.909.6612
NC license No: C-1126
RMF Project No: 2153223.F0

Fayetteville Regional Airport – Airline Terminal Improvements Part 2

400 Airport Road
Fayetteville, North Carolina 28306

SECOND FLOOR PLAN – AREA B – FIRE PROTECTION

DRAWN BY: BMC
REVIEWED BY: ALM
DATE: 07-19-19
PROJECT NO.: 1808

REVISIONS

SHEET NUMBER

FP1.02B

GENERAL NOTES:

1. COORDINATE SPRINKLER TYPE WITH CEILING TYPES. SEE ARCHITECTURAL REFLECTED CEILING PLANS FOR DESIGN INTENT..

DRAWING NOTES:

1. PROVIDE INTERMEDIATE-TEMPERATURE SPRINKLER AT THE TOP OF THE ELEVATOR HOISTWAY. (ALTERNATE G-1)
2. PROVIDE SIGN ON UTILITY ROOM DOOR INDICATING THE LOCATION OF THE ZONE CONTROL VALVE.

FIRE RATED WALL LEGEND

1 HOUR FIRE PARTITION
1 HOUR FIRE BARRIER

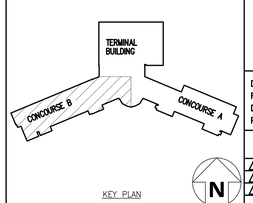

KEY PLAN

GRAPHIC SCALE

8 4 0 8 16

SCALE: 1/8"=1'-0"
UNIT OF MEASURE: FEET

GORDON JOHNSON
Architecture
834 Hay Street, Suite 4
Fayetteville, NC 28305
Phone: (910) 222-2966
E-mail: gordon@gordonjohnsonarchitects.com

© Copyright 2019
Gordon E. Johnson, AIA

Reproduction or publication of this document is not permitted without the expressed consent of the above.

Legal Disclaimer
The Gordon Johnson Architect's comply with the requirements of the American with Disabilities Act (ADA) however, Architects and Engineers are not licensed to interpret law or give advice concerning laws. The intent should have this document reviewed by the attorney to determine if it complies with this and other laws.

RMF ENGINEERING, INC.
8720 Red Oak Blvd. Suite 370
Charlotte, NC 28217
P: 704.909.6612
NC license No: C-1126
RMF Project No: 2153223.F0

Fayetteville Regional Airport – Airline Terminal Improvements Part 2

400 Airport Road
Fayetteville, North Carolina 28306

SECOND FLOOR PLAN – AREA C – FIRE PROTECTION

DRAWN BY: BMC
REVIEWED BY: ALM
DATE: 07-19-19
PROJECT NO.: 1808

REVISIONS

SHEET NUMBER

FP1.02C

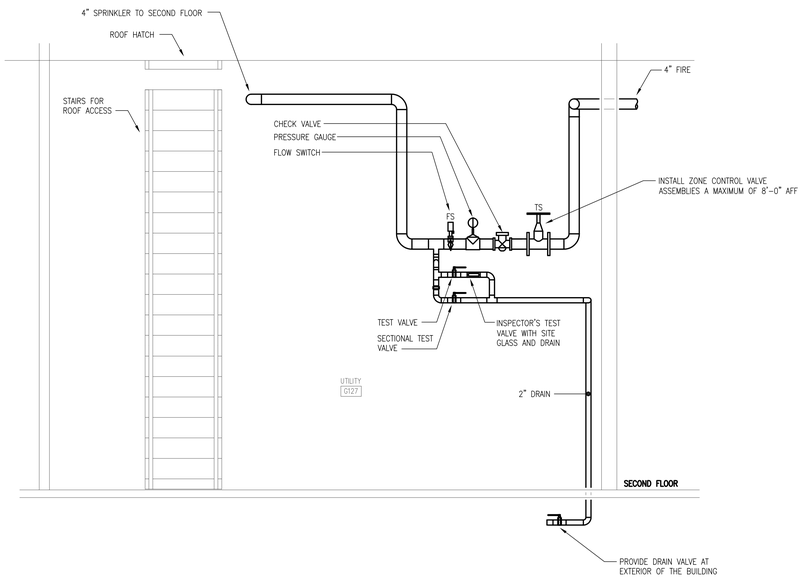

A
FP1.01A/B FP3.01

SECTION VIEW A – FIRE PROTECTION

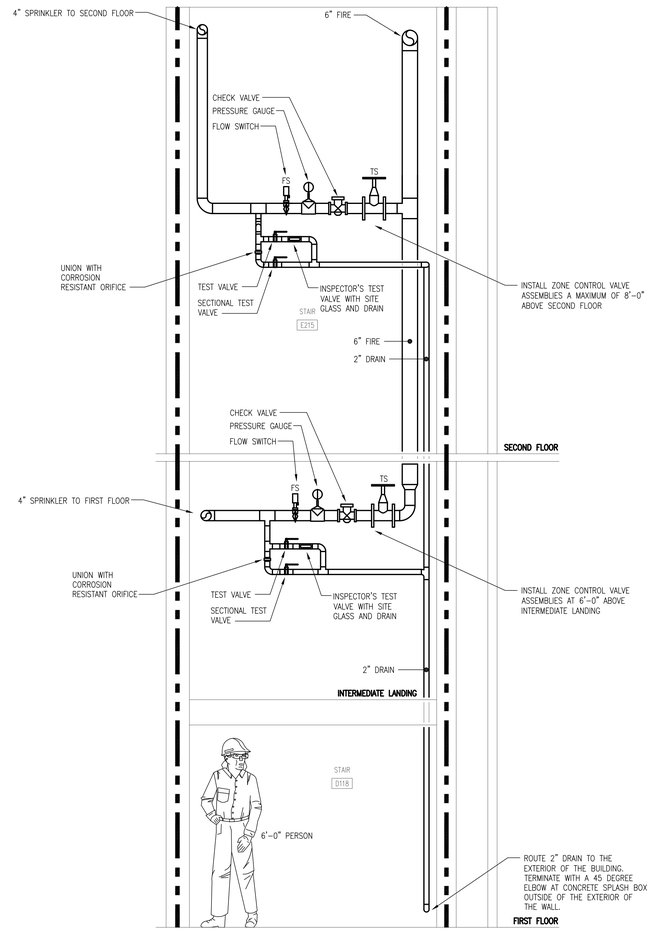

B
FP1.01C FP3.01

SECTION VIEW B – FIRE PROTECTION

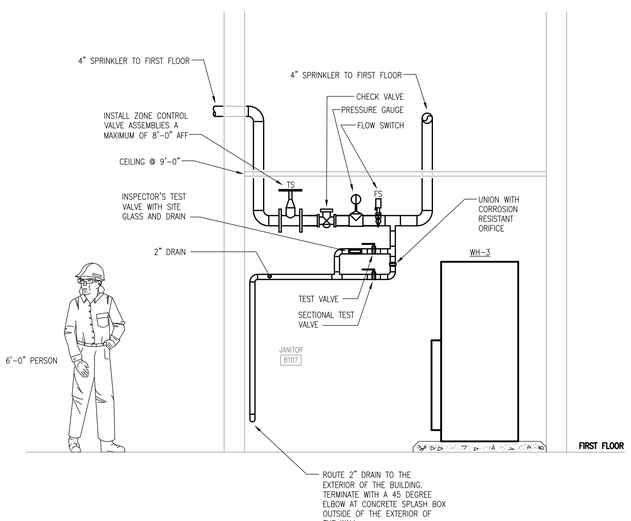

C
FP1.01A/B FP3.01

SECTION VIEW A – FIRE PROTECTION

FIRE RATED WALL LEGEND

1 HOUR FIRE PARTITION
1 HOUR FIRE BARRIER

KEY PLAN

N

GRAPHIC SCALE

2 1 0 2 4

SCALE: 1/2"=1'-0"
UNIT OF MEASURE: FEET

GORDON JOHNSON
Architecture
834 Hay Street, Suite A
Fayetteville, NC 28305
Phone: (910) 222-2966
E-mail: gordon@
gordonjohnsonarchitects.com

© Copyright 2019
Gordon L. Johnson, AIA

Reproduction or publication of this document in whole or in part without the expressed consent of the above.

Legal Disclaimer
This document is intended to comply with the requirements of the American with Disabilities Act (ADA) however, Architects and Engineers are not licensed to interpret law or give advice concerning laws. The intent should have this document reviewed by an attorney to determine if it complies with this and other laws.

RMF ENGINEERING, INC.
8720 Red Oak Blvd. Suite 370
Charlotte, NC 28217
P: 704.909.6612
NC license No: C-1126
RMF Project No: 2153223.F0

Fayetteville Regional Airport – Airline Terminal Improvements Part 2

400 Airport Road
Fayetteville, North Carolina 28306

SECTION VIEWS – FIRE PROTECTION

DRAWN BY: BMC
REVIEWED BY: AJM
DATE: 07-19-19
PROJECT NO.: 1808

REVISIONS

SHEET NUMBER
FP3.01

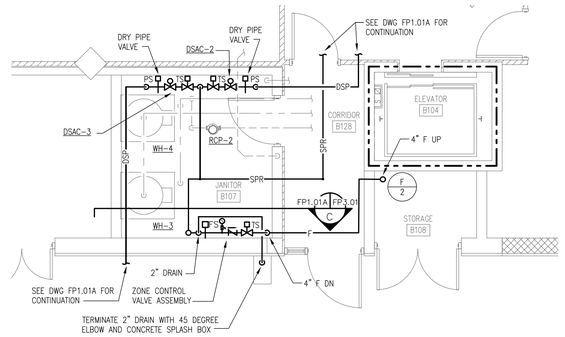

JANITOR B107 ENLARGED PLAN-UPPER LEVEL-FP — SCALE: 1/4"=1'-0" — 1

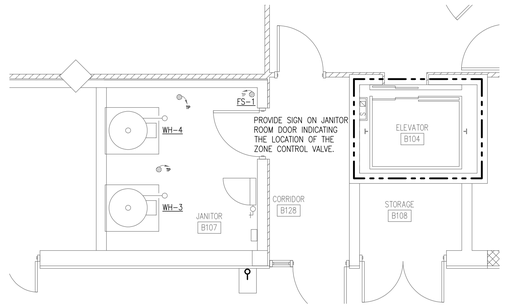

JANITOR B107 ENLARGED PLAN-LOWER LEVEL-FP — SCALE: 1/4"=1'-0" — 2

GRAPHIC SCALE
4 2 0 4 8
SCALE: 1/4"=1'-0"
UNIT OF MEASURE: FEET

GORDON JOHNSON
Architecture
834 Hay Street, Suite 1
Fayetteville, NC 28305
Phone: (910) 323-2966
E-mail: gordon@gordonjohnsonarchitects.com
© Copyright 2019 Gordon L. Johnson, AIA
Reproduction or publication of this document is not permitted without the expressed consent of the above.
Legal Disclaimer
The Gordon Johnson Architect's scope with the responsibility of the Gordon AIA Portfolio (or GAA) Owner, Architects and Engineers are not licensed to interpret law or give advice concerning laws. The Owner should have the document reviewed by his attorney to determine if it complies with this and other laws.

RMF ENGINEERING, INC.
8720 Red Oak Blvd. Suite 370
Charlotte, NC 28217
P: 704.909.6612
NC license No: C-1126
RMF Project No: 2153223.F0

Fayetteville Regional Airport - Airline Terminal Improvements Part 2
400 Airport Road
Fayetteville, North Carolina 28306

ENLARGED PLANS - FIRE PROTECTION

DRAWN BY: BMC
REVIEWED BY: ALM
DATE: 07-19-19
PROJECT NO.: 1808

REVISIONS

SHEET NUMBER
FP4.01

UL/cUL SYSTEM NO. W-L-1054
METAL PIPE THROUGH GYPSUM WALL ASSEMBLY

Classified by Underwriters Laboratories, Inc. to UL 1479 and CAN/ULC-S115

F-RATING = 1-HR. OR 2-HR.
T-RATING = 0-HR.
L-RATING AT AMBIENT = LESS THAN 1 CFM / SQ FT
L-RATING AT 400°F = LESS THAN 1 CFM / SQ FT

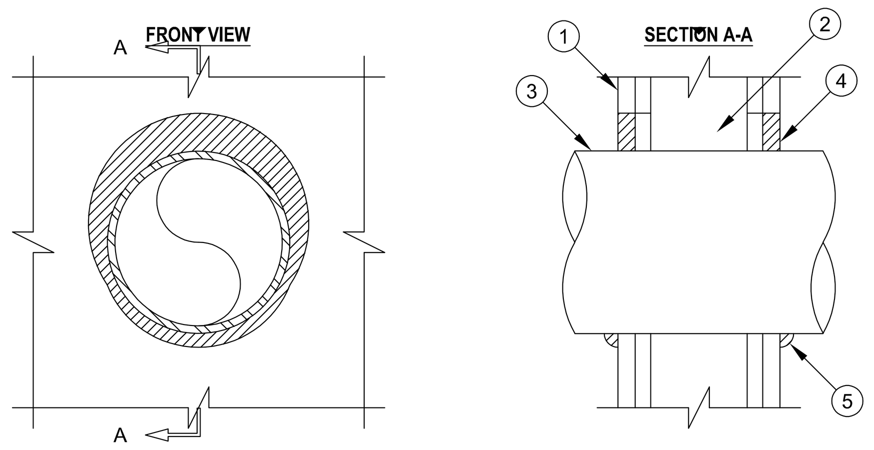

1. GYPSUM WALL ASSEMBLY (UL/cUL CLASSIFIED U300 OR U400 SERIES) (1-HR. OR 2-HR. FIRE-RATING) (2-HR. SHOWN).
2. [NOT SHOWN] WOOD STUDS TO CONSIST OF NOMINAL 2" x 4" LUMBER. STEEL STUDS TO BE MINIMUM 2-1/2" WIDE.
3. PENETRATING ITEM TO BE ONE OF THE FOLLOWING :
   A. MAXIMUM 30" DIAMETER STEEL PIPE (SCHEDULE 10 OR HEAVIER).
   B. MAXIMUM 30" DIAMETER CAST IRON PIPE.
   C. MAXIMUM 6" NOMINAL DIAMETER COPPER PIPE.
   D. MAXIMUM 6" NOMINAL DIAMETER STEEL CONDUIT.
   E. MAXIMUM 4" NOMINAL DIAMETER EMT.
4. MINIMUM 5/8" DEPTH HILTI FS-ONE INTUMESCENT FIRESTOP SEALANT.
5. MINIMUM 1/2" BEAD HILTI FS-ONE INTUMESCENT FIRESTOP SEALANT APPLIED AT POINT OF CONTACT.

NOTES : 1. MAXIMUM DIAMETER OF OPENING :
A. 32-1/4" FOR STEEL STUD WALLS.
B. 14-1/2" FOR WOOD STUD WALLS.
2. ANNULAR SPACE = MINIMUM 0", MAXIMUM 2-1/4".
3. PIPE MAY BE INSTALLED WITH CONTINUOUS POINT OF CONTACT.
4. PIPE MAY BE INSTALLED AT AN ANGLE NOT GREATER THAN 45° FROM PERPENDICULAR.

Hilti Firestop Systems

Reproduced by HILTI, Inc. Courtesy of Underwriters Laboratories, Inc. December 02, 2011

DETAIL – UL FIRE RATED PENETRATION
SCALE: NONE (3)

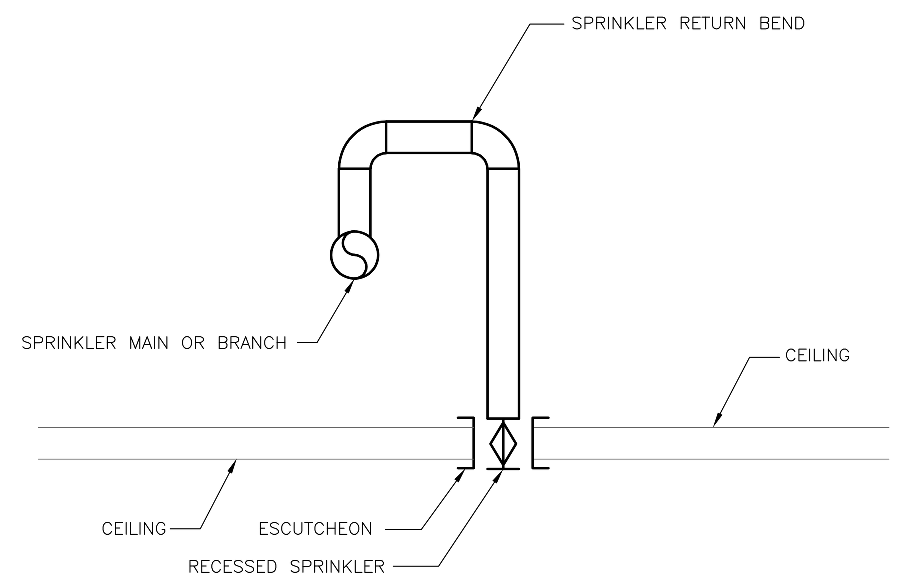

NOTE:
NO FLEX PIPING PERMITTED

DETAIL – CEILING SPRINKLER
SCALE: NONE (2)

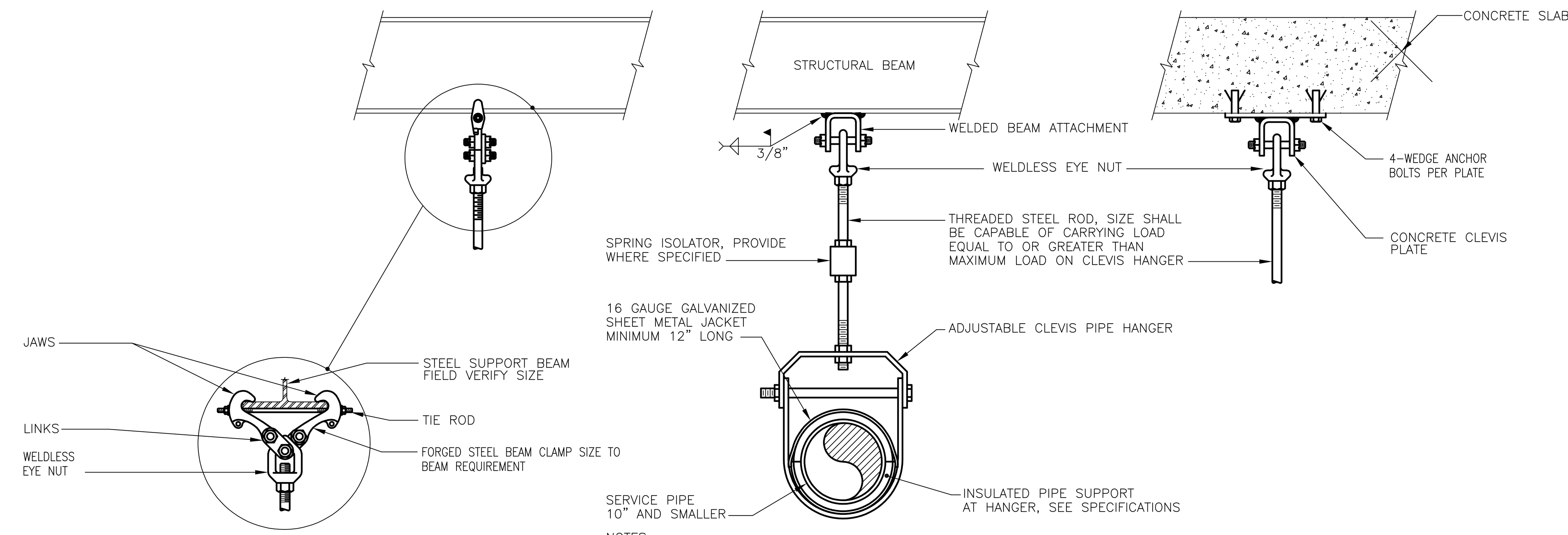

NOTES:
1. HANGER SPACING SHALL BE IN ACCORDANCE WITH THE PROJECT SPECIFICATIONS.
2. CLEVIS TYPE PIPE HANGERS SHALL BE USED FOR PIPE SIZES 10" AND SMALLER AND WHEN PIPING SYSTEMS ARE STATIONARY.

DETAIL – PIPE HANGER SUPPORT
SCALE: NONE (1)

UL/cUL SYSTEM NO. W-L-1164
METAL PIPE IN A SLEEVE THROUGH GYPSUM WALL ASSEMBLY

Classified by Underwriters Laboratories, Inc. to UL 1479 and CAN/ULC-S115

F-RATING = 1 AND 2-HR.
T-RATING = 0-HR.

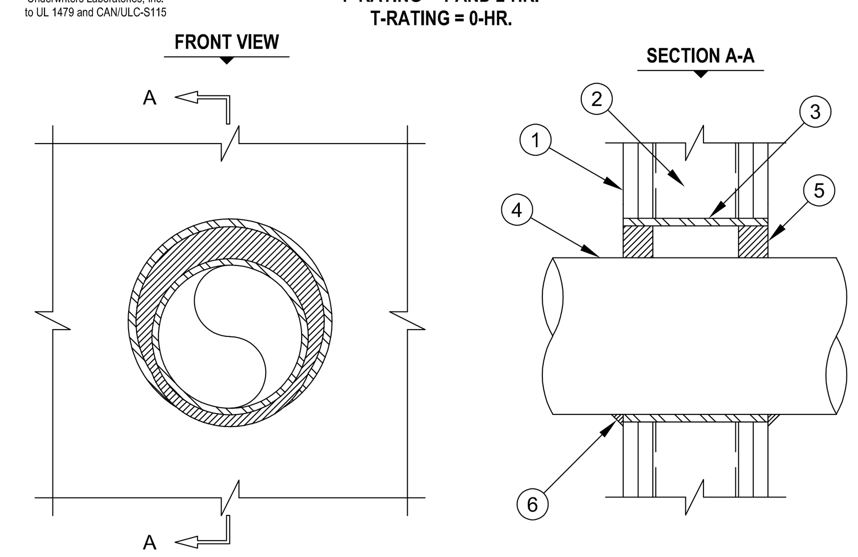

1. GYPSUM WALL ASSEMBLY (UL/ULC CLASSIFIED U300 OR U400 SERIES) (1-HR. OR 2-HR. FIRE-RATING) (2-HR. SHOWN).
2. (NOT SHOWN). WOOD STUDS TO CONSIST OF NOMINAL 2" x 4" LUMBER. STEEL STUDS TO BE MINIMUM 2-1/2" WIDE.
3. MAXIMUM 32" DIAMETER STEEL PIPE SLEEVE (SCHEDULE 40 OR HEAVIER).
4. PENETRATING ITEM TO BE ONE OF THE FOLLOWING :
   A. MAXIMUM 30" DIAMETER STEEL PIPE (SCHEDULE 10 OR HEAVIER).
   B. MAXIMUM 30" DIAMETER CAST IRON PIPE.
   C. MAXIMUM 6" NOMINAL DIAMETER COPPER PIPE.
   D. MAXIMUM 6" NOMINAL DIAMETER STEEL CONDUIT.
   E. MAXIMUM 4" NOMINAL DIAMETER EMT.
5. HILTI FS-ONE INTUMESCENT FIRESTOP SEALANT :
   A. MINIMUM 5/8" DEPTH, FOR A 1-HR. FIRE-RATING.
   B. MINIMUM 1-1/4" DEPTH, FOR A 2-HR. FIRE-RATING.
6. MINIMUM 1/2" BEAD HILTI FS-ONE INTUMESCENT FIRESTOP SEALANT AT POINT OF CONTACT.

NOTES : 1. MAXIMUM DIAMETER OF OPENING = 32" FOR STEEL STUD WALLS.
2. MAXIMUM DIAMETER OF OPENING = 14-1/2" FOR WOOD STUD WALLS.
3. ANNULAR SPACE = MINIMUM 0", MAXIMUM 1-7/8".

Hilti Firestop Systems

Reproduced by HILTI, Inc. Courtesy of Underwriters Laboratories, Inc. December 02, 2011

DETAIL – UL FIRE RATED PENETRATION
SCALE: NONE (6)

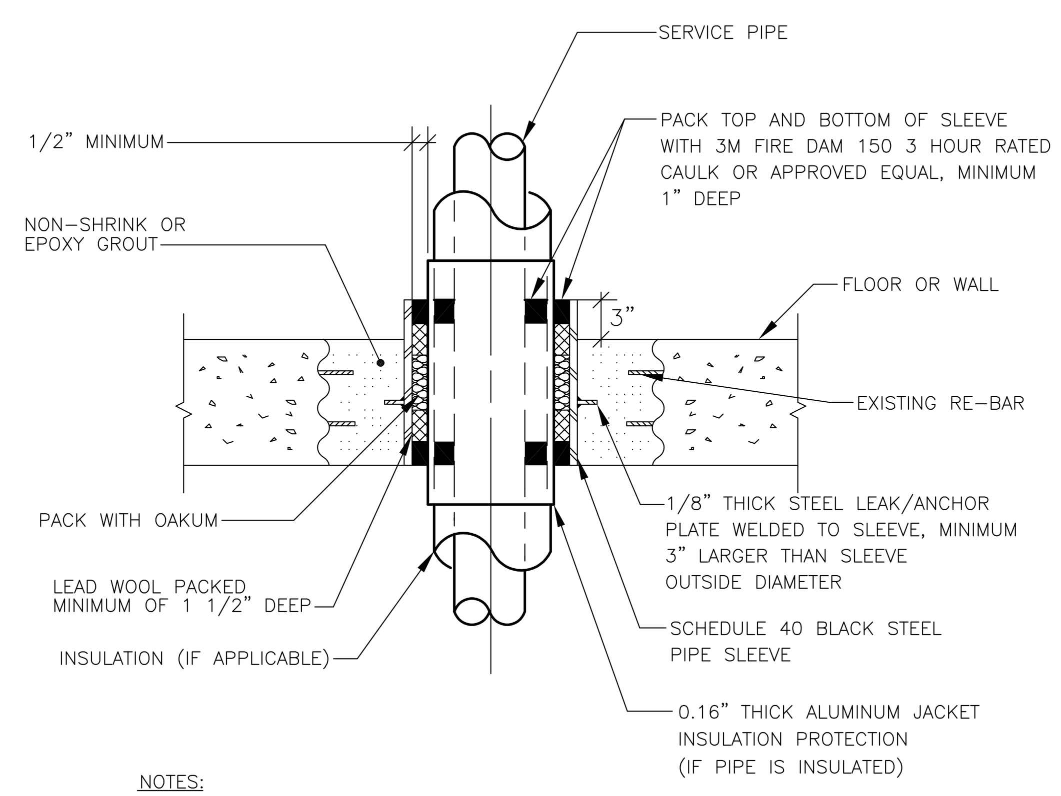

NOTES:
1. PIPE SHALL BE SUPPORTED BY RISER CLAMPS OR

DETAIL – PIPE SLEEVE
SCALE: NONE (5)

NOTE:
NO PIPING, DUCTS OR EQUIPMENT FOREIGN TO THE ELECTRICAL EQUIPMENT OR ARCHITECTURAL APPURTENANCES SHALL BE PERMITTED TO BE INSTALLED IN OR PASS THROUGH THE DEDICATED SPACES SHOWN ABOVE WITHOUT THE WRITTEN PERMISSION OF THE DESIGN ENGINEER AND THE AUTHORITY HAVING JURISDICTION.

NOTE:
THIS FIGURE ILLUSTRATES THE WORKING SPACE IN FRONT OF THE PANELBOARD REQUIRED BY SECTION 110-26 OF THE NATIONAL ELECTRICAL CODE.

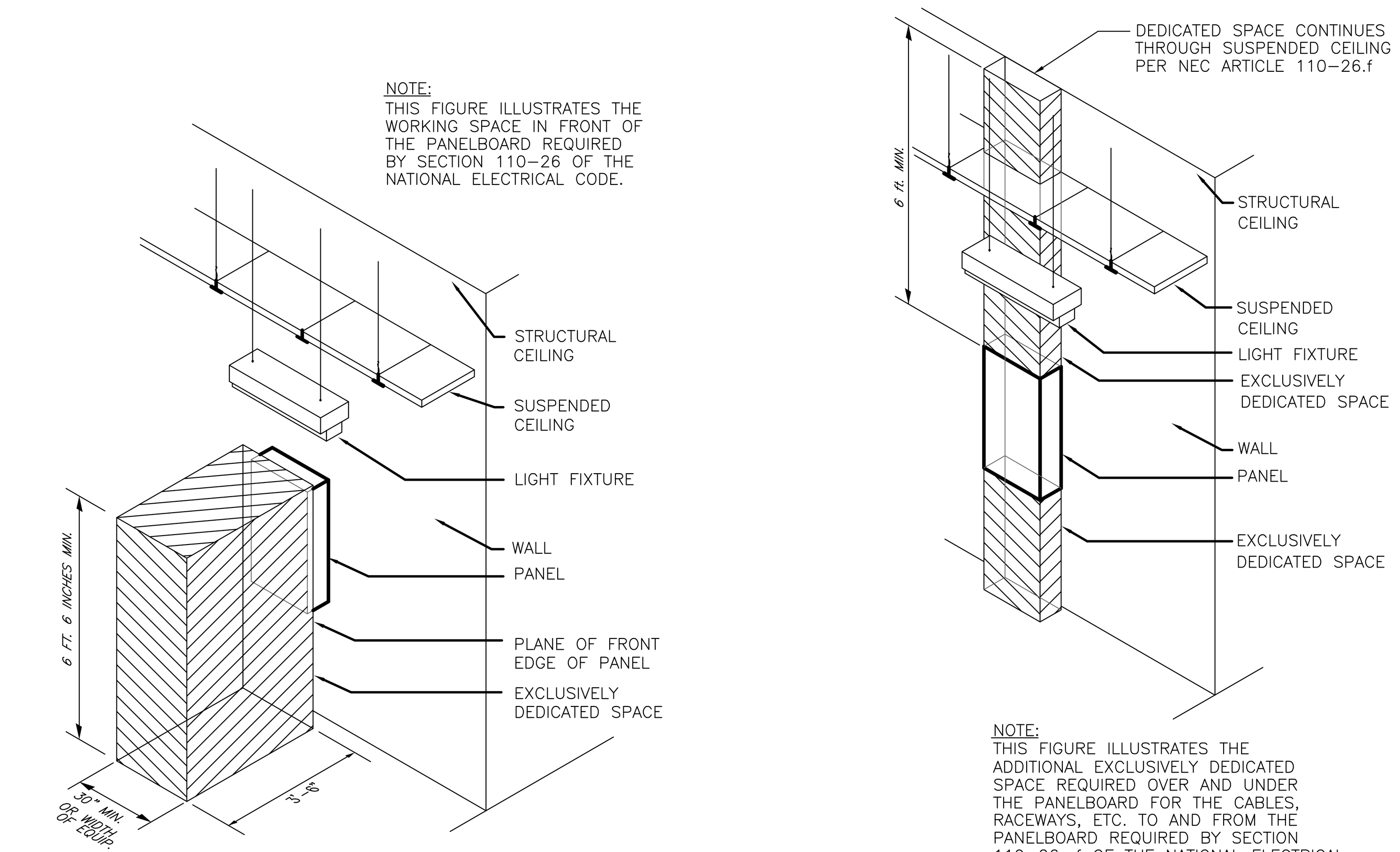

NOTE:
THIS FIGURE ILLUSTRATES THE ADDITIONAL EXCLUSIVELY DEDICATED SPACE REQUIRED OVER AND UNDER THE PANELBOARD FOR THE CABLES, RACEWAYS, ETC. TO AND FROM THE PANELBOARD REQUIRED BY SECTION 110-26, f OF THE NATIONAL ELECTRICAL CODE.

DETAIL – CLEAERANCES FOR ELECTRICAL PANELS
SCALE: NONE (4)

UL SYSTEM NO. W-J-2091
PLASTIC PIPE THORUGH CONCRETE WALL OR BLOCK WALL ASSEMBLY

Classified by Underwriters Laboratories, Inc. to UL 1479 and CAN/ULC-S115

F-RATING = 4-HR.
T-RATING = 2 AND 4-HR.

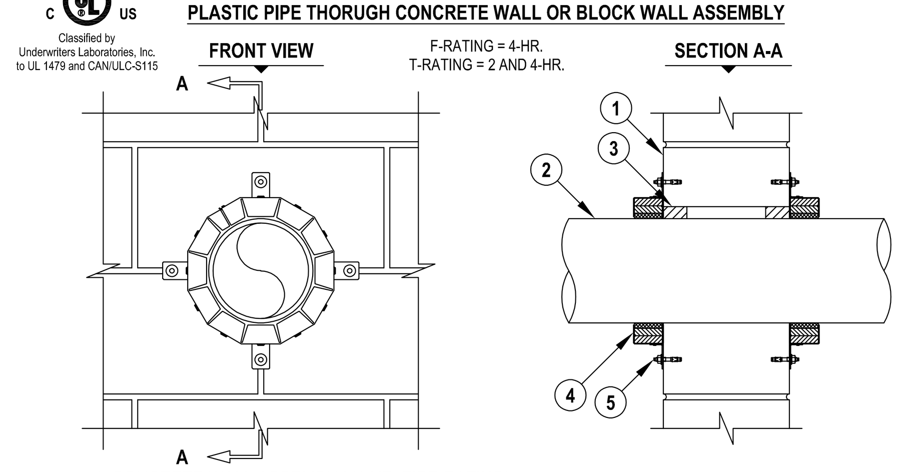

1. CONCRETE WALL ASSEMBLY (4-HR. FIRE-RATING) :
   A. LIGHTWEIGHT OR NORMAL WEIGHT CONCRETE WALL (MINIMUM 8-1/2" THICK).
   B. ANY UL CLASSIFIED CONCRETE BLOCK WALL.
2. PENETRATING ITEM TO BE ONE OF THE FOLLOWING (SEE NOTE NO. 2 BELOW) :
   A. MAXIMUM 6" NOMINAL DIAMETER PVC PLASTIC PIPE (CELLULAR OR SOLID CORE).
   B. MAXIMUM 6" NOMINAL DIAMETER CPVC PLASTIC PIPE (CLOSED PIPING SYSTEM ONLY).
3. MINIMUM 1-1/2" DEPTH HILTI FS-ONE INTUMESCENT FIRESTOP SEALANT.
4. HILTI CP 643N FIRESTOP COLLAR WITH FASTENING HOOKS (SEE TABLE BELOW).
5. EACH FASTENING HOOK SECURED TO BOTTOM OF FLOOR WITH 1/4" x 1-3/4" LONG STEEL EXPANSION BOLTS IN CONJUNCTION WITH 3/4" DIAMETER STEEL WASHERS (EX. HILTI KWIK-BOLT 3).

NOMINAL PIPE DIAMETER	PRODUCT DESCRIPTION	ANNULAR SPACE		T-RATING
		MINIMUM	MAXIMUM	
1-1/2"	CP 643 50/1.5" N	0"	1/2"	4
2"	CP 643 63/2" N	0"	1/2"	4
3"	CP 643 90/3" N	0"	1/2"	4
4"	CP 643 110/4" N	0"	1/2"	4
6"	CP 643 160/6" N	0"	3/4"	2

NOTES : 1. MAXIMUM DIAMETER OF OPENING = 7-3/8".
2. CLOSED OR VENTED PIPING SYSTEM (PVC = SCHEDULE 40; CPVC = SDR 13.5).

Hilti Firestop Systems

Reproduced by HILTI, Inc. Courtesy of Underwriters Laboratories, Inc. December 02, 2011

DETAIL – UL FIRE RATED PENETRATION
SCALE: NONE (9)

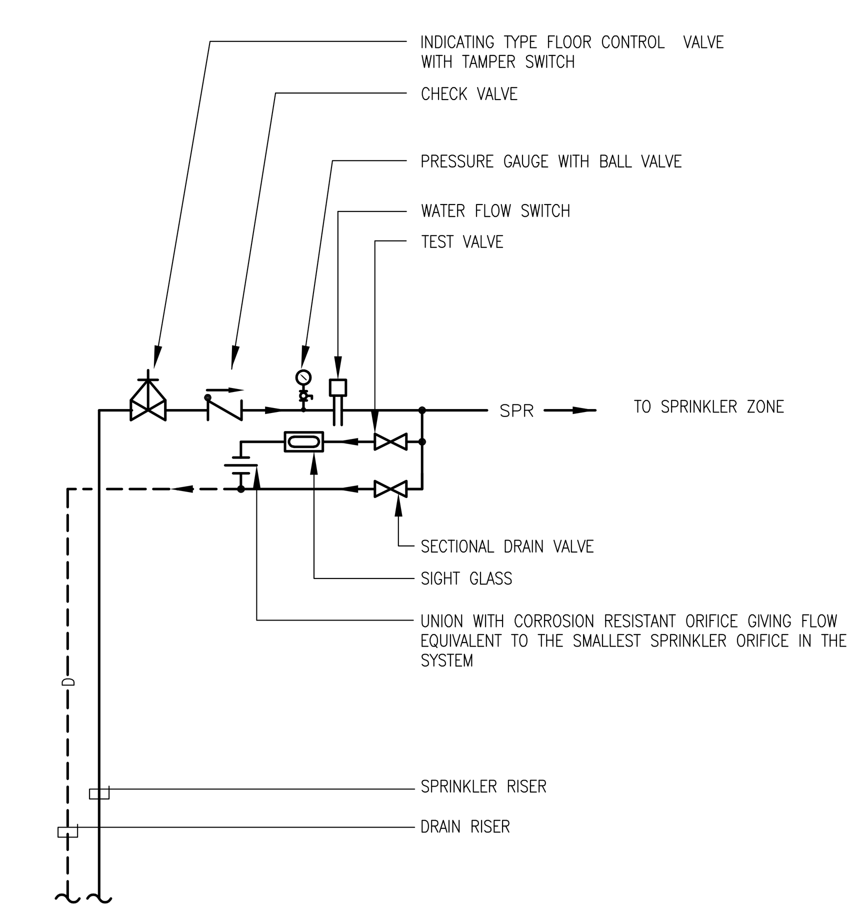

DETAIL – SPRINKLER CONTROL VALVE
SCALE: NONE (8)

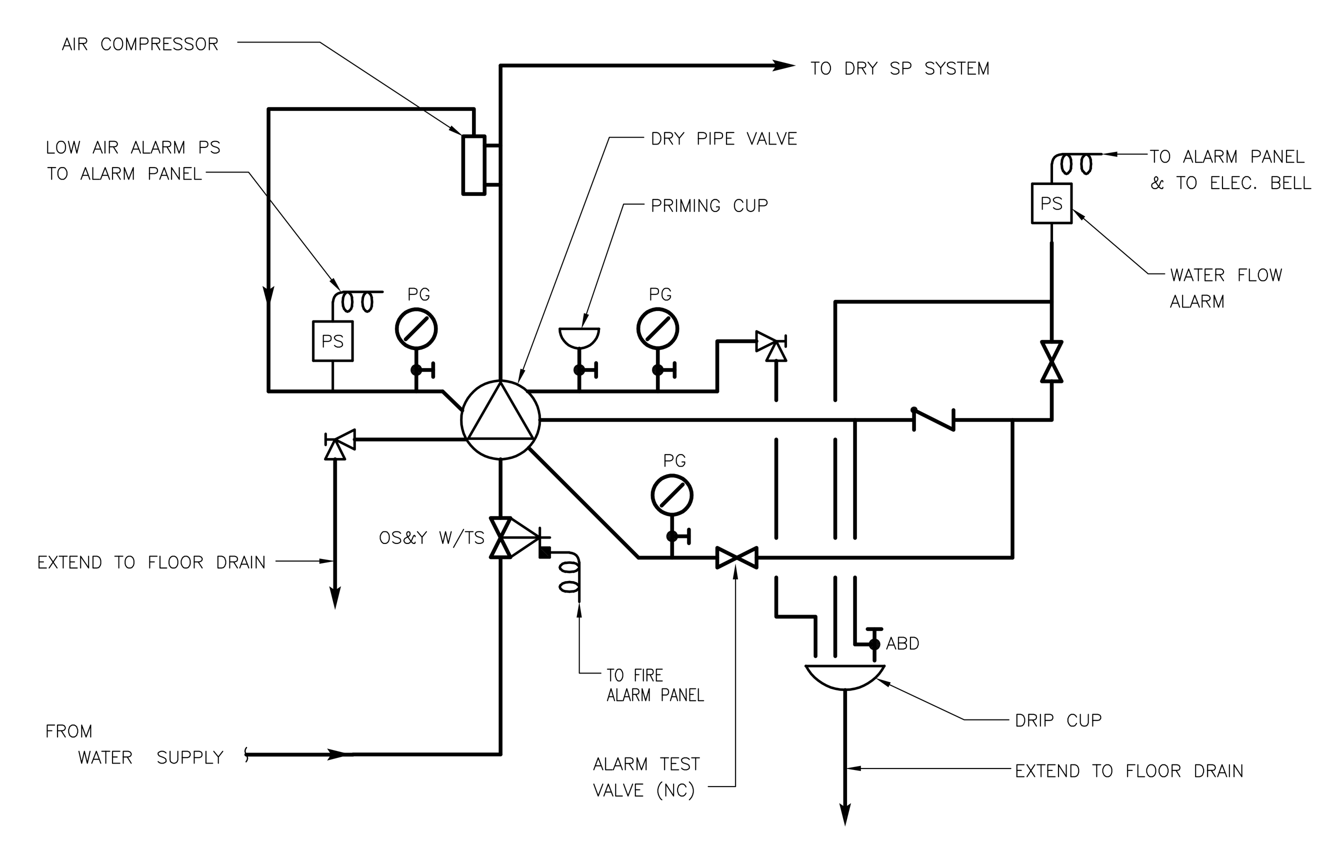

DETAIL – DRY VALVE SCHEMATIC
SCALE: NONE (7)

GORDON JOHNSON Architecture
654 Hay Street, Suite 4
Fayetteville, NC 28301
Phone: (910) 223-2186
E-Mail: gordon@gordonjohnsonarchitecture.com

© Copyright 2019 Gordon E. Johnson, AIA
Reproduction or publication of this document is not permitted without the expressed consent of the above.
Legal Disclaimer: This document is intended to comply with the requirements of the American with Disabilities Act (ADA). However, Architects and Engineers are not licensed to interpret laws or give advice concerning laws. The Owner should have this document reviewed by his attorney to determine if it complies with ADA and other laws.

RMF ENGINEERING, INC.
8720 Red Oak Blvd, Suite 370
Charlotte, NC 28217
P: 704.909.6612
NC license No: C-1126
RMF Project No: 2153223.F0

Fayetteville Regional Airport – Airline Terminal Improvements Part 2

400 Airport Road
Fayetteville, North Carolina 28306

FIRE PROTECTION DETAILS

DRAWN BY: BMC
REVIEWED BY: ALM
DATE: 07-19-19
PROJECT NO.: 1808

REVISIONS

SHEET NUMBER
FP5.01

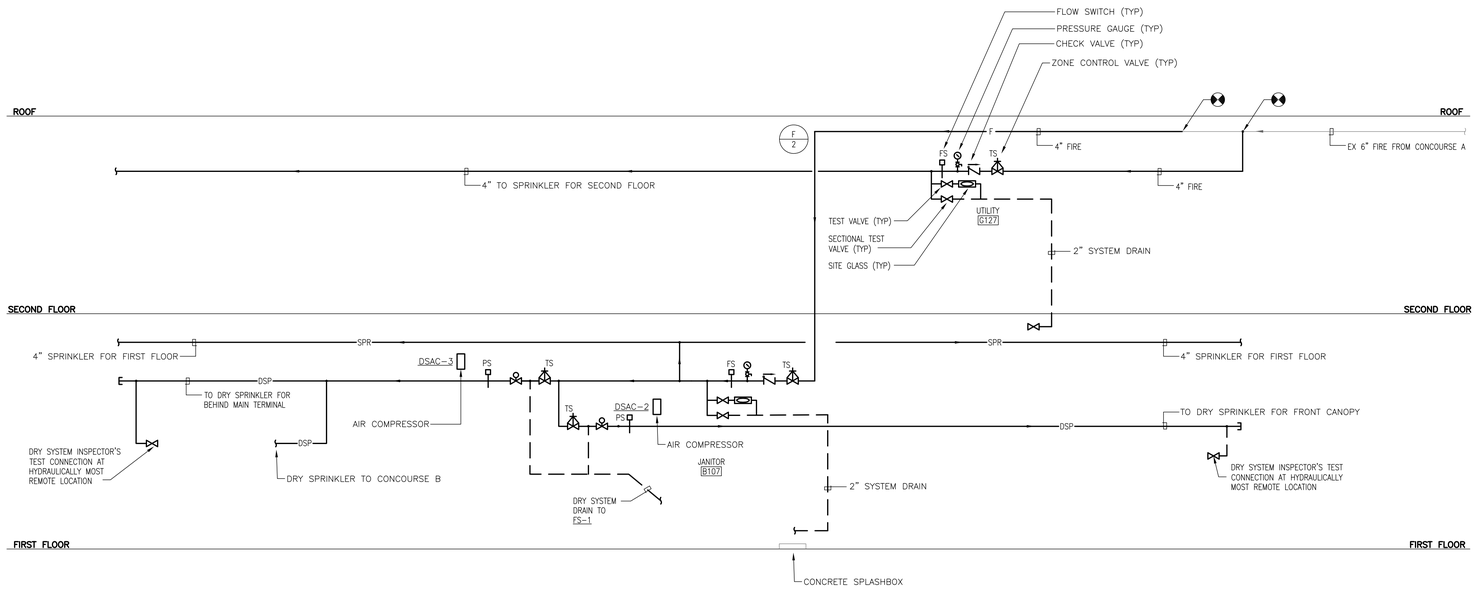

FIRE PROTECTION RISER – MAIN TERMINAL (AREAS A AND B)

SCALE: NONE (1)

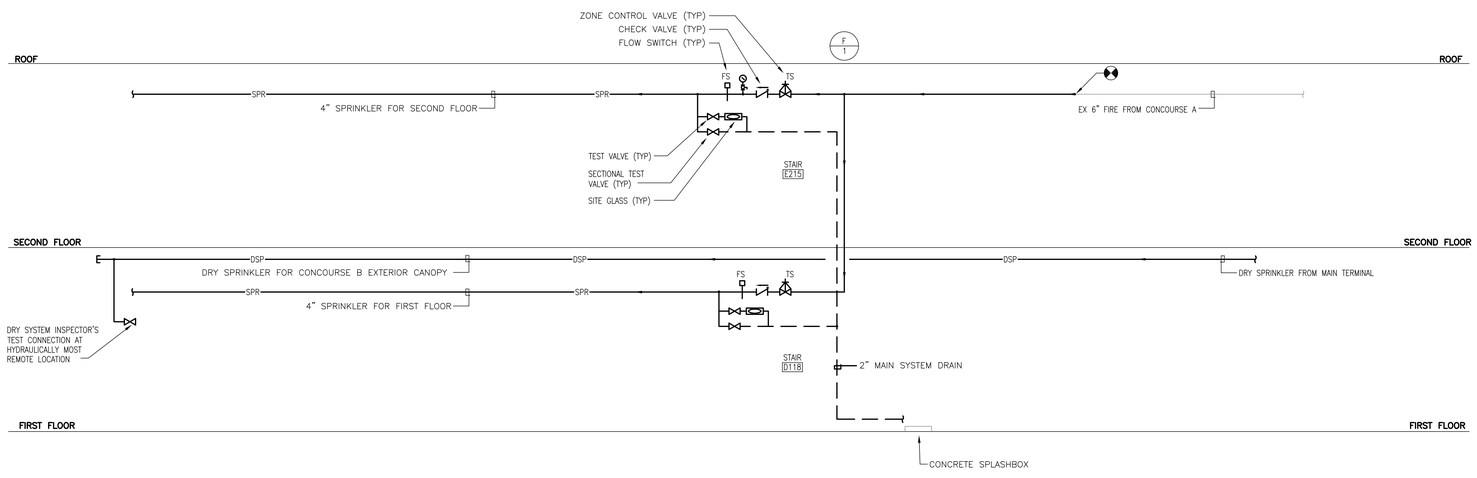

FIRE PROTECTION RISER – CONCOURSE B (AREA C)

SCALE: NONE (2)

GORDON JOHNSON
Architecture
834 Hay Street, Suite A
Fayetteville, NC 28305
Phone: (910) 323-2960
E-mail: gordon@gordonjohnsonarchitecture.com

© Copyright 2019 Gordon L. Johnson, AIA
Reproduction or publication of this document is not permitted without the expressed consent of the above.
Legal Disclaimer:
This document is intended to comply with the requirements of the American with Disabilities Act (ADA) however, Architects and Engineers are not licensed to interpret law or give advice concerning laws. The intent should have the expressed intention to be attempt to become F.F.C compliant with this and other laws.

RMF ENGINEERING, INC.
8720 Red Oak Blvd. Suite 370
Charlotte, NC 28217
P: 704.909.6612
NC license No: C-1126
RMF Project No: 2153223.F0

Fayetteville Regional Airport – Airline Terminal Improvements Part 2

400 Airport Road
Fayetteville, North Carolina 28306

FIRE PROTECTION RISER DIAGRAMS

DRAWN BY: BMC
REVIEWED BY: ALM
DATE: 07-19-19
PROJECT NO.: 1808

REVISIONS

SHEET NUMBER
FP6.01